KING COUNTY

1200 King County Courthouse
516 Third Avenue
Seattle, WA 98104

Signature Report

May 23, 2006

Motion 12292

Proposed No. 2006-0025.1 **Sponsors** Hague and Constantine

A MOTION approving the King County Executive's Recommended Regional Infiltration and Inflow Control Program.

WHEREAS, the King County council adopted the Regional Wastewater Services Plan ("RWSP") by Ordinance 13680 on November 23, 1999, and

WHEREAS, the RWSP is an amendment to the King County Comprehensive Water Pollution Abatement Plan and serves as the policy basis for providing wastewater management services to the King County wastewater service area through 2030 and beyond, and

WHEREAS, the RWSP contains policies relating to the control of inflow and infiltration ("I/I"), which is clean storm or groundwater, into the regional wastewater collection and treatment system, and

WHEREAS, the RWSP I/I policies guided a cooperative process undertaken from 2000 through 2005, between King County and the local sewer agencies it serves, that

17 studied the methods, costs and effectiveness of identifying and reducing I/I in local
18 sewage collection systems, and
19 WHEREAS, during this six-year study, the levels of I/I in local collection systems
20 were assessed through extensive flow monitoring and modeling, various I/I reduction
21 pilot projects were undertaken, and a thorough benefit/cost analysis was completed to
22 evaluate the cost-effectiveness of I/I reduction efforts, and
23 WHEREAS, the results of these analytical efforts of the county and local agencies
24 have demonstrated that I/I can be quantified through monitoring and modeling, that it can
25 effectively be removed through targeted I/I reduction efforts and that removal is cost-
26 effective in certain identified project areas, and
27 WHEREAS, implementation of cost-effective I/I reduction projects would be
28 funded from existing budget for the otherwise needed conveyance system improvement
29 projects, and
30 WHEREAS, the goal of a Regional Infiltration and Inflow Control Program will
31 be to maximize savings in capital costs for conveyance system improvements by reducing
32 peak I/I flows where cost-effective, and thereby reducing, delaying or eliminating the
33 need for otherwise planned conveyance system capacity, and
34 WHEREAS, the Regional Infiltration and Inflow Control Program
35 recommendation also includes measures for long-term control for the prevention of future
36 increases in I/I throughout the regional wastewater collection system, and
37 WHEREAS, the King County executive's recommendation for a long-term
38 Regional Infiltration and Inflow Control Program reflects the results of the six-year study

39 undertaken pursuant to the RWSP and the consensus reached between King County and
40 the local agencies on major elements of a regional I/I control program,
41 NOW, THEREFORE, BE IT MOVED by the Council of King County:
42 The Executive's Recommended Regional Infiltration and Inflow Control Program,
43 Attachment A to this motion, is hereby approved.
44

Motion 12292 was introduced on 1/30/2006 and passed by the Metropolitan King County Council on 5/22/2006, by the following vote:

Yes: 8 - Mr. Phillips, Mr. von Reichbauer, Ms. Lambert, Mr. Ferguson, Mr. Gossett, Ms. Hague, Ms. Patterson and Mr. Constantine
No: 0
Excused: 1 - Mr. Dunn

KING COUNTY COUNCIL
KING COUNTY, WASHINGTON

Larry Phillips, Chair

ATTEST:

Anne Noris, Clerk of the Council

Attachments A. Executive's Recommended Regional Infiltration and Inflow Control Program -- December 2005

EXECUTIVE'S RECOMMENDED REGIONAL INFILTRATION AND INFLOW CONTROL PROGRAM

King County, Washington

December 2005

King County
Department of
Natural Resources and Parks
Wastewater Treatment Division

Executive's Recommended Regional Infiltration and Inflow Control Program

King County, Washington

December 2005

King County
Department of Natural Resources and Parks
Wastewater Treatment Division
King Street Center, KSC-NR-0512
201 South Jackson Street
Seattle, WA 98104
http://dnr.metrokc.gov/wtd/i-i/

Acknowledgements

This document was prepared under the direction of Mark Buscher, Program Manager of the Wastewater Treatment Division's Regional Infiltration/Inflow (I/I) Control Program.

King County staff supporting this document includes Erica Herrin, James Foulk, Cathie Scott, Mary Ullrich, Zhong Ji, Mark Lampard, P.E., and Bob Swarner, P.E.

We thank the following component agencies that make up the King County service area for their ongoing efforts to develop the Regional I/I Control Program:

Alderwood Water and Wastewater District
Cedar River Water and Sewer District
City of Algona
City of Auburn*
City of Bellevue
City of Black Diamond
City of Bothell
City of Brier*
City of Issaquah
City of Kent*
City of Kirkland*
City of Lake Forest Park*
City of Mercer Island*
City of Pacific
City of Redmond*
City of Renton
City of Seattle
City of Tukwila
Coal Creek Utility*
Cross Valley Water District
The Highlands Sewer District
Lakehaven Utility District
Northeast Sammamish Sewer & Water District
Northshore Utility District*
Olympic View Water & Sewer District
Ronald Wastewater District*
Sammamish Plateau Water and Sewer District
Skyway Water and Sewer District*
Soos Creek Water and Sewer District
ValVue Sewer District*
Vashon Sewer District
Woodinville Water District

*Pilot project agencies

For comments or questions, contact:
Mark Buscher
King County Wastewater Treatment Division
201 South Jackson Street
M.S. KSC-NR-0512
Seattle, WA 98104-3856
206-684-1242
mark.buscher@metrokc.gov

This information is available in alternative formats on request at 206-684-1242 (voice) or 711 (TTY).

Table of Contents

List of Tables

List of Figures

Appendices

Supporting Documents (available on CD in the back of report)

Chapter 1

Executive Summary

This chapter summarizes the *Executive's Recommended Regional Infiltration/Inflow Control Program.* It provides background for the program recommendation and then presents a list of specific recommended actions and the basis for these actions. Subsequent chapters in this report discuss the program recommendation and the data that support it in more detail.

1.1 Background

The King County Wastewater Treatment Division (WTD) serves 34 local wastewater agencies in the regional service area (Figure 1-1). WTD must provide adequate capacity in its system to convey and treat wastewater flows sent by the agencies through their collection systems. With the exception of portions of the City of Seattle that have combined sewers (designed to convey wastewater and stormwater in the same pipes), sewers in the regional wastewater system are designed to convey only wastewater. However, many of these "separated" sewers also convey clean groundwater and stormwater that enter through leaky pipes, improper storm drain connections, and other means. This clean water, called infiltration and inflow (I/I), takes up capacity that could otherwise be used for wastewater alone and generates the need to build added capacity in pipelines, treatment plants, and other facilities. This added capacity results in higher capital and operating costs to the regional system that are born uniformly by all agencies and passed onto ratepayers in each jurisdiction.

Recognizing the need to explore the feasibility of I/I control, the King County Council approved I/I control policies as part of the *Regional Wastewater Services Plan* (RWSP), adopted in 1999 under Ordinance 13680. The policies establish the framework and process for development of a long-term regional I/I control program. In response to the RWSP policies, the County as represented through WTD staff worked in a consensus-based approach with local agencies to conduct a comprehensive 6-year I/I control study. The study began in 2000 and culminates with this Executive's recommendation for a regional I/I control program. The RWSP defined the following study components:

- Define current levels of I/I for each local agency tributary to the regional system.
- Select and construct pilot projects to demonstrate the cost-effectiveness of collection system rehabilitation projects.
- Develop model standards, guidelines, procedures, and policies for use by local agencies to reduce I/I in their systems.

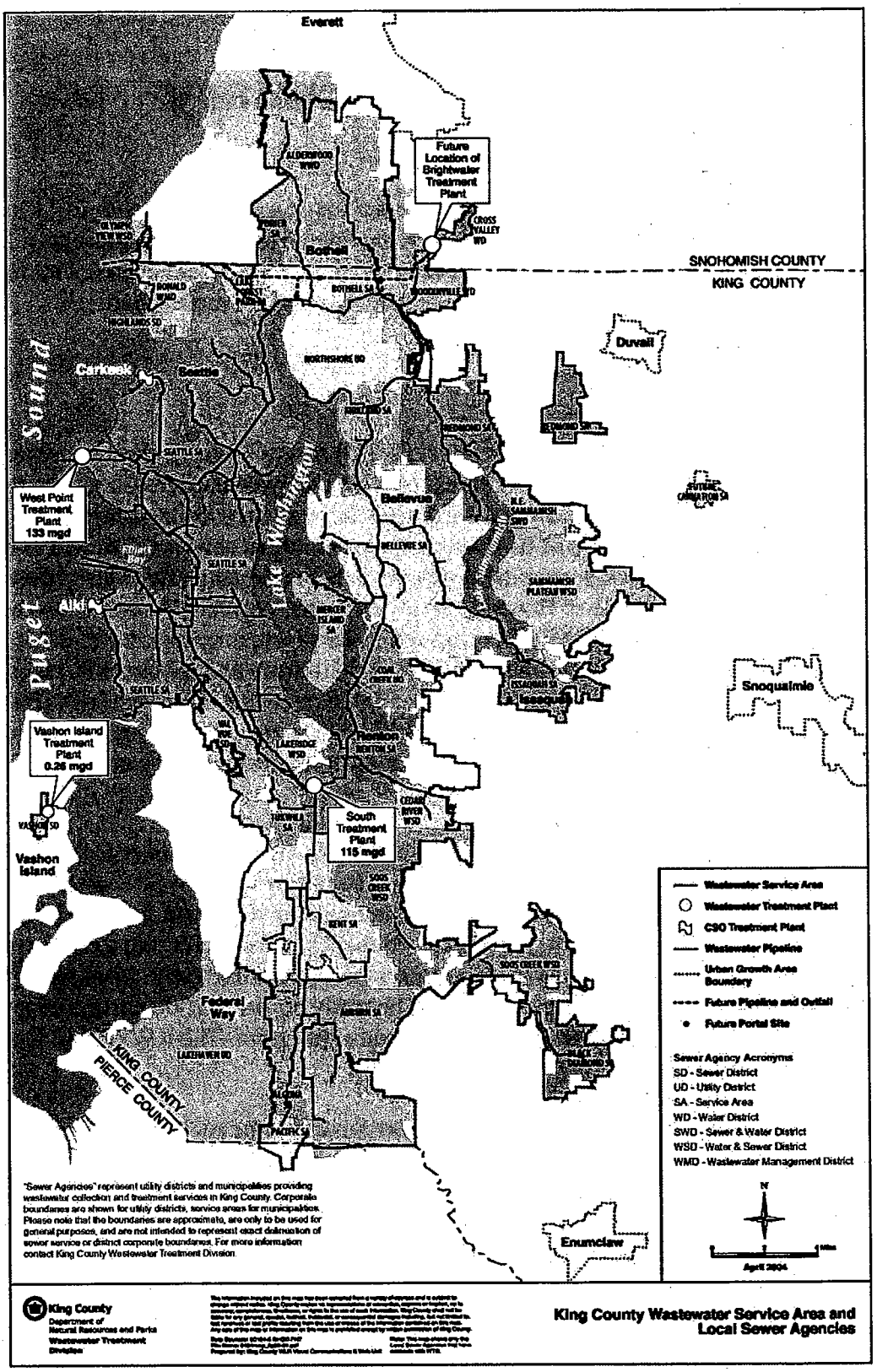

Figure 1-1. Local Wasteswater Agencies Within King County Wastewater Service Area

- Identify cost-effective options to remove up to 30 percent of I/I expected to occur in local agency systems during a 20-year peak flow condition.[1]
- Develop a long-term regional I/I control plan for review and approval by the King County Council.

During the I/I control study, the County conducted 10 workshops with local agencies and over 75 work sessions with the MWPAAC Engineering and Planning (E&P) Subcommittee.[2] The County will continue to work collaboratively with local agencies in implementing the regional I/I control program.

1.2 Executive's Recommended I/I Control Program

The following recommendations make up the Executive's recommended regional I/I control program. The recommendations represent the consensus reached by the County and local agencies throughout the 6-year program development process. Knowledge gained from flow monitoring, modeling, pilot projects, and a benefit-cost analysis conducted during the I/I control study served as the basis for consensus.

Recommendations are presented for both I/I reduction and long-term I/I control and for program administration and policy. In addition to cost-effectively removing enough I/I from the collection system to delay, reduce, or eliminate some otherwise needed conveyance system improvement (CSI) projects, measures must be in place to maintain I/I reductions long-term and to prevent future increases in I/I throughout the regional system. Long-term I/I control includes policy, administrative, financial, and technical measures that promote an ongoing program of review, maintenance, and repair of the collection and conveyance system.

Recommendation Highlights

King County and the local agencies would select, implement, and evaluate two or three "initial" I/I reduction projects to test the effectiveness of I/I reduction on a larger scale than the pilot projects.

After completion of the initial projects, recommendations would be made to the King County Council regarding long-term I/I reduction and control, including applicable changes to policy or code.

Recommendations for I/I Reduction:

- Identify cost-effective I/I reduction projects on a project-specific basis, rather than on a regional basis or by the need to meet specific I/I reduction targets.
- Select two or three initial I/I reduction projects for implementation from the list of nine cost-effective projects identified in the benefit-cost analysis. King County and MWPAAC (through the E&P Subcommittee) would work cooperatively to select these projects.

[1] Peak flow is the highest combination of base flow and I/I expected to enter a wastewater system during wet weather at a given frequency that treatment and conveyance facilities are designed to accommodate.
[2] MWPAAC = Metropolitan Water Pollution Abatement Advisory Committee.

- In the next 3 to 5 years, construct the selected initial projects to test planning assumptions and to gain more information about costs.
- Proceed with work on private property when a project calls for it. Experiences on initial projects would be documented in terms of public involvement activities, private property participation rates, costs, neighborhood impacts, groundwater effects, and special construction issues that arise.
- Fund initial projects through King County wastewater revenue that is dedicated to funding CSI projects in the regional conveyance system. For future I/I reduction projects, options to supplement King County funding may be considered. For example, local agencies could contribute funds to expand the project scope in order to take advantage of construction efficiencies, as was done in some pilot projects, or to move a project into the cost-effective category.
- Conduct pre- and post-project flow monitoring to test the ability of I/I reduction projects to reduce enough flow to delay, downsize, or eliminate the need for CSI projects.
- Reconvene the E&P Subcommittee when initial projects and post-project flow monitoring are completed to evaluate results of projects, adjust planning assumptions if appropriate, and further refine private property protocols or best practices to ensure that successful approaches are carried forward to future work.
- If the initial projects are deemed successful and future I/I reduction is approved, proceed programmatically to apply I/I reduction planning to all CSI project planning. Wherever an I/I reduction project is a cost-effective alternative to the planned CSI project, the County and local agencies would implement the I/I reduction project provided that it is environmentally and logistically feasible.

Recommendations for Long-Term I/I Control:

- Make use of existing local agency regulations to ensure that new development and redevelopment within the regional wastewater service area meet up-to-date construction standards for sewer conveyance lines and connections.
- Apply the standards, guidelines, procedures, and policies in final draft form to the initial I/I reduction projects (included as Appendix A). Once they have been tested on large-scale projects, the standards, guidelines, procedures, and policies would be reviewed and finalized by the local agencies and translated into King County policy in the form of an ordinance.
- Conduct a system flow audit of the regional and local systems every 10 years to track I/I levels. The County and local agencies would conduct the audits and use the information to cooperatively make decisions about how to adjust I/I control measures as may be necessary.
- Do not implement a surcharge on local agencies for flows that exceed targeted I/I reduction levels already established in the King County Code. The County and local agencies found that implementing a surcharge, as contemplated in the King County Code, would be costly to administer and would pose difficulties in verifying violations.

Recommendations for Program Administration and Policy:

- Authorize King County to centrally manage the I/I control program, to develop public information materials for the overall program, and to serve as a central clearinghouse for program inquiries and training.
- Conduct flow monitoring to assess effectiveness of I/I reduction over time.
- After completion of the initial I/I reduction projects, develop recommendations regarding changes to local agency agreements and/or the King County Code.

1.3 Basis for the Recommendations

1.3.1 Process for Identifying Cost-Effective I/I Reduction Projects

A benefit-cost analysis was conducted to determine the optimal I/I reduction available and then to generate a list of cost-effective I/I reduction projects based on regional conveyance needs. The analysis relied on a variety of information collected during the I/I control study:

- **Conveyance system improvement projects.** A regional needs assessment was completed in early 2005 as a part of the I/I control study. The agreement identified CSI projects that would be needed to accommodate peak flows through 2050—the projected date when the regional wastewater service area will be fully built out and all portions of the service area will be connected to the wastewater treatment system.
- **Assumptions regarding sizing, costs, I/I reduction potential, and other planning factors.** Assumptions were developed in coordination with the E&P Subcommittee. They are based on industry standards, experience in operating wastewater systems in the region, and results of the research and I/I pilot projects conducted for the I/I control study. The set of assumptions for I/I reduction rates was intentionally made conservative for the benefit-cost analysis to avoid potential overestimation of benefits or underestimation of costs. A set of initial assumptions that was less conservative and based on direct experiences in the pilot projects was used to conduct a sensitivity analysis to provide the upper end of the range for cost-effectiveness outcomes.
- **Flow data collected during the I/I study and flow predictions based on the data.** Extensive flow monitoring data were used in commercially available hydrologic and hydraulic models to estimate present and future conveyance system capacity needs. These modeled estimates were supported by information regarding local agency wastewater facilities, current and future land uses, population projections, and other modeling assumptions.
- **Results of pilot I/I reduction projects.** Lessons learned from 10 pilot projects about costs and effectiveness of I/I reduction techniques served as an important input to assumptions used in the benefit-cost analysis.

- **Definition of cost-effectiveness of I/I reduction projects.** For the purpose of developing this recommendation, cost-effective projects were defined as those for which the capital savings that result from I/I reduction exceed the costs of constructing the I/I project. When an I/I reduction project delays, downsizes, or eliminates the need for a conveyance facility improvement, the savings achieved (benefit) must be higher than the cost of the I/I reduction project (cost) to arrive at a positive benefit-cost ratio (1 or greater).
- **Alternative methods for applying cost-effectiveness of I/I reduction.** During the I/I control study, three alternatives were developed for evaluating cost-effectiveness: project-specific basis, region-wide basis, and a 30-percent I/I reduction goal. The project-specific basis was identified as the preferred alternative. Considering cost-effectiveness on a project-specific basis focuses I/I reduction where downstream conveyance benefits are the greatest and achieves the greatest possible savings to the region.

Nine cost-effective I/I reduction projects resulted from evaluating cost-effectiveness on a project-specific basis:

- The estimated cost of implementing the nine cost-effective I/I reduction projects is approximately $73 million.
- The anticipated I/I reduction achievable is estimated at 22 million gallons per day (mgd), or approximately 18 percent of the I/I present in the affected mini basins and approximately 5 percent of the I/I present in the entire regional service area.
- As a result of reducing I/I flows, the capital costs for associated CSI projects could be reduced from approximately $268 to $164 million, resulting in a regional CSI savings of nearly $104 million.
- The net overall savings realized from implementing the nine identified cost-effective I/I reduction projects is estimated at approximately $31 million.

The benefit-cost analysis for removing 30 percent of the region's total estimated 450 million gallons per day (mgd) of I/I from the regional collection system indicated that the benefit ($116 million) to cost ($398 million) ratio for achieving 30-percent I/I reduction would be 0.29, which is considerably below the benefit-cost ratio of greater than 1 that was set for cost-effectiveness. The benefit-cost analysis using the third alternative—evaluating the cost-effectiveness of I/I reduction on a region-wide basis—identified 13 I/I reduction projects with benefit-cost ratios ranging from a high of 3.3 to a low of 0.48. While several projects on the list were not cost-effective, the savings from the other projects were spread out to produce an average benefit-cost ratio of 1.02, essentially a break-even ratio. To pursue this alternative, approximately $132 million (cost) would be spent on I/I reduction to achieve $134 million in savings (benefit).

1.3.2 Considerations Related to I/I Reduction and Control

Development of the I/I control program recommendation required extensive research and discussions regarding how to manage I/I when it originates on private property and, whether to implement a surcharge on local agencies for flows that exceed targeted I/I reduction levels contained in the King County Code.

1.3.2.1 Managing I/I on Private Property

Flow monitoring, modeling, and pilot projects found that a majority of I/I originates on private property via defective side sewers or improperly connected storm drains, and that significant I/I flow reduction can be achieved in basins where I/I reduction work is conducted on private property. Four of the ten I/I pilot projects focused repairs on private property and achieved the highest levels of I/I reduction. Pilot project work done on private property was funded by King County with contributions by local agencies. Because there was no cost to the participating property owners, the voluntary participation rate in the pilot projects was 95 percent.

A legal analysis indicated that if I/I reduction could be shown to be cost-effective (that it could be shown to have a public benefit that outweighs the cost), the expenditure of public funds for this purpose would be legally defensible and would not be a violation of the Washington State Constitution provisions on the subject. All of the nine cost-effective I/I reduction projects identified in the benefit-cost analysis would entail work on private property to achieve the projected I/I reductions. In the analysis, these projects were deemed cost-effective inclusive of the costs and potential risks of private property work. It is therefore recommended that the County and local agencies proceed with work on private property for the selected two or three initial projects and that King County fund these projects. If the initial projects demonstrate the feasibility of working on private property on a larger scale than the pilot projects, repairs on private property can be included as part of the overall I/I reduction strategy in the planning and design of capacity-related CSI projects.

1.3.2.2 Whether to Implement an I/I Surcharge

The King County Code provides for the consideration of establishing a surcharge to local agencies that do not meet targeted I/I reduction levels that already exist in the Code. So far, the provisions of the Code regarding target I/I reduction levels, or I/I threshold, have not been enforced because calculation of a surcharge as a means of enforcing the threshold for each local agency is impractical. The Code provisions are complicated, language in agreements with local agencies is not uniform in regard to exemptions for older collection pipes (those built before 1961), and the annual cost to cover equipment and staffing for the continuous flow monitoring that would be required for enforcement would be several million dollars. Moreover, this annual cost would not result in any physical improvement to the regional system and, in years where there are no major storm events, the I/I thresholds would likely not be exceeded by any local agency and no surcharge revenue to defray annual monitoring costs would be generated. It is therefore recommended that no surcharge for excess I/I levels from local agencies be implemented.

1.4 Supporting Documents

Major reports that have contributed to the contents of this recommendation report include the *2000/2001 Wet Weather Flow Monitoring Technical Memorandum, 2001/2002 Wet Weather Flow Monitoring Technical Memorandum, Pilot Project Report, Alternatives/Options Report, Regional Needs Assessment Report,* and *Benefit-Cost Analysis Report.* These reports and other information produced during the I/I control study can be found on the CD included with this recommendation report and on the I/I program Web site at http://dnr.metrokc.gov/wtd/i-i.

Chapter 2

Background

In December 1999, the King County Council approved the development of a Regional Infiltration and Inflow (I/I) Control Program as part of the Regional Wastewater Services Plan (RWSP). The purpose of the I/I control program is to reduce the amount of peak wet-weather flow entering the County's wastewater conveyance system when it is cost-effective to do so. Reduction of I/I in the system has the potential to lower the risk of sanitary sewer overflows and decrease the costs of conveying and treating wastewater.

In 2000, King County's Wastewater Treatment Division, in cooperation with the local component agencies that it serves, launched an ambitious 6-year $41-million I/I control study. The study included efforts to identify sources of I/I, test the effectiveness of various I/I control technologies, and examine the benefits and costs of I/I reduction and control.

This chapter provides background and context for the I/I control study. Subsequent chapters of this report document the findings of the study and the King County Executive's recommendations for a long-term I/I control program.

2.1 How I/I Enters the Regional System

King County's regional conveyance and treatment system accepts wastewater flow from 34 component wastewater agencies (see Figure 1-1).

Local agency sewers are either combined or separated sewers (Figure 2-1). Combined sewer systems are designed to carry both stormwater and wastewater. Separated sewer systems are designed to carry wastewater ("base flow") only. Often, however, separated sewers carry clean groundwater and stormwater in addition to the wastewater (Figure 2-2). Groundwater **(infiltration)** seeps into sewers through holes, breaks, joint failures, defective connections, and other openings. Stormwater **(inflow)** rapidly flows into sewers via roof and foundation drains, catch basins, downspouts, manhole covers, and other sources.

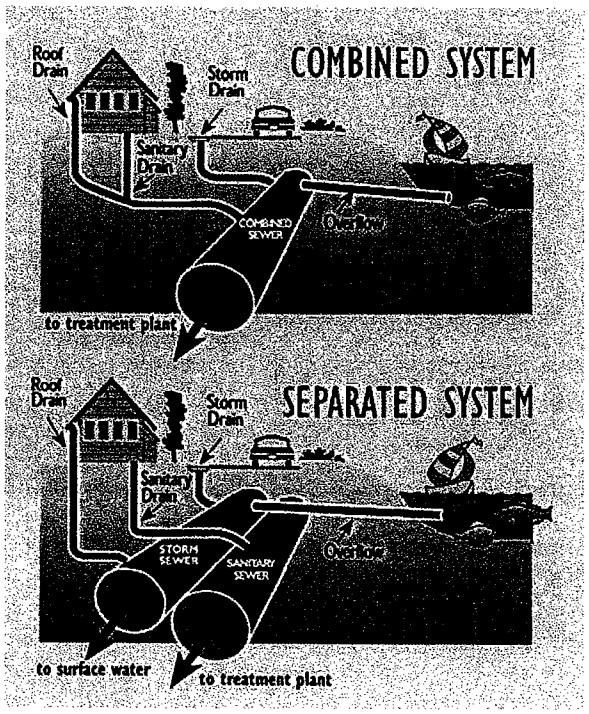

Figure 2-1. Combined Sewer System and Separated Sewer System

Older sewers in parts of the City of Seattle are combined sewers. Most of the flow from the combined sewers is conveyed to the West Point Treatment Plant in Seattle. The remainder of the local agency sewers are separated. Most of the flow from the separated systems is conveyed to the South Treatment Plant in Renton.

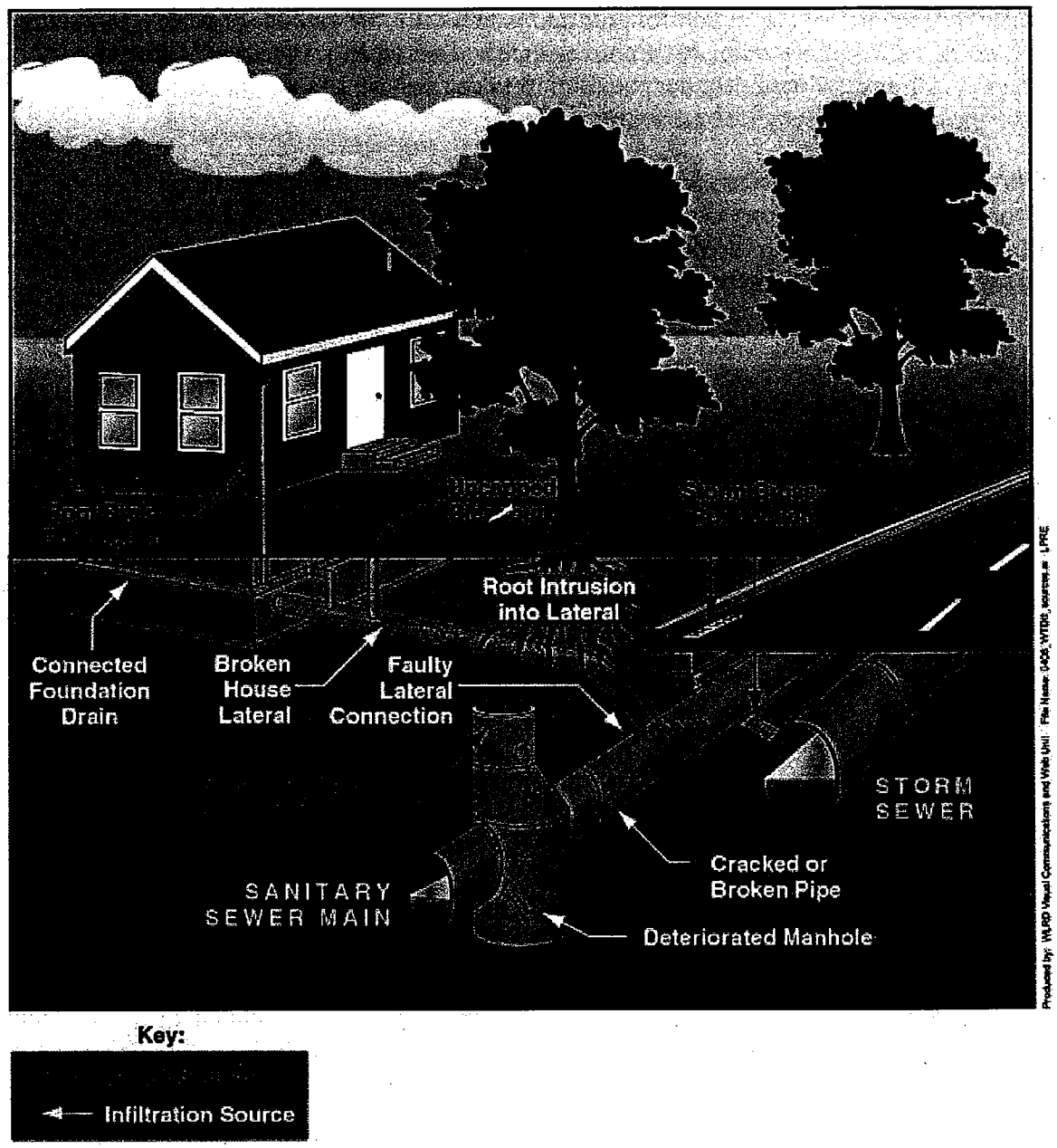

Figure 2-2. Sources of Infiltration and Inflow

2.2 Why I/I Control Is Important

If the amount of I/I entering the separated local agency sewers could be reduced, the risk of sanitary sewer overflows and the costs of conveying and treating wastewater could also be reduced. This reduction can be achieved through both direct I/I reduction and long-term I/I control. Reduction and control involve different approaches and strategies that work together to provide both near-term and ongoing elements of an effective I/I management program.

Direct I/I reduction refers to sewer system rehabilitation or replacement projects that can be done in a basin to reduce I/I flows and alleviate immediate downstream capacity constraints. **Long-term I/I control** refers to policy, administrative, financial, and technical measures aimed at limiting future increases in I/I flow. Keeping the system in good repair minimizes future increases of I/I in the system. Long-term I/I control measures include public education, design standards for new construction or rehabilitation, requirements for inspection and/or permitting, and regulations or policies for new development.

Emerging and current federal and state regulations, King County Code, and agreements between King County and local agencies recognize the importance of controlling I/I in wastewater systems. Other agencies around the country share King County's challenges and have implemented I/I control programs—either through regulatory actions or voluntarily. Their experiences were similar to those accumulated during the County's 6-year I/I control study.

Definitions of I/I Terms

Base flow: Wastewater that enters sewers during dry weather in the absence of I/I.

Combined sewer: A pipe designed to carry both stormwater and wastewater.

Infiltration: Groundwater that seeps into sewers through holes, breaks, joint failures, defective connections, and other openings.

Inflow: Stormwater that rapidly flows into sewers via roof and foundation drains, catch basins, downspouts, manhole covers, and other sources.

I/I control: Policy, administrative, financial, and technical measures aimed at limiting future increases in I/I flow.

I/I reduction: Sewer system rehabilitation or replacement projects that are constructed to reduce I/I flows and alleviate immediate downstream capacity constraints.

Lateral sewer: The portion of a building's sewer pipe that is in the public right-of-way.

Separated sewer: A pipe designed to transport household, industrial, and commercial wastewater and to exclude stormwater sources.

Side sewer: The portion of the sewer pipe that extends from a building to the public right-of-way.

Peak flow: The highest combination of base flow and I/I expected to enter a wastewater system during wet weather at a given frequency that treatment and conveyance facilities are designed to accommodate.

2.2.1 Increased Capital and Operating Costs

The King County Wastewater Treatment Division (WTD) must provide adequate capacity to convey and treat all of the flows sent by the agencies through their collection systems. I/I in the separated sewer system takes up capacity that could otherwise be used for wastewater alone and generates the need to build added conveyance and treatment capacity. The extra capacity required to convey and treat I/I results in higher capital and operating costs to the regional system that are born uniformly by all agencies and passed onto ratepayers in each jurisdiction.

The regional wastewater conveyance system has developed over the last 40-plus years. Most of the system has the necessary capacity to transmit wastewater flows today and in the future. However, some portions of the system are at or near capacity during periods of peak flow. As the region's population and employment base grow over time, these portions of the system and others will not have adequate capacity to transmit peak wastewater flows to treatment plants. Inadequate capacity increases the risk of wastewater backups and overflows.

While there are multiple reasons why portions of the conveyance system are at or near capacity, a major contributing factor is the capacity taken up by I/I flows in the system. Several capacity related capital improvements are needed in the regional system that are directly related to excessive I/I entering the system upstream of the needed improvements. Figure 2-3 demonstrates how peak I/I flows can far exceed base flows.

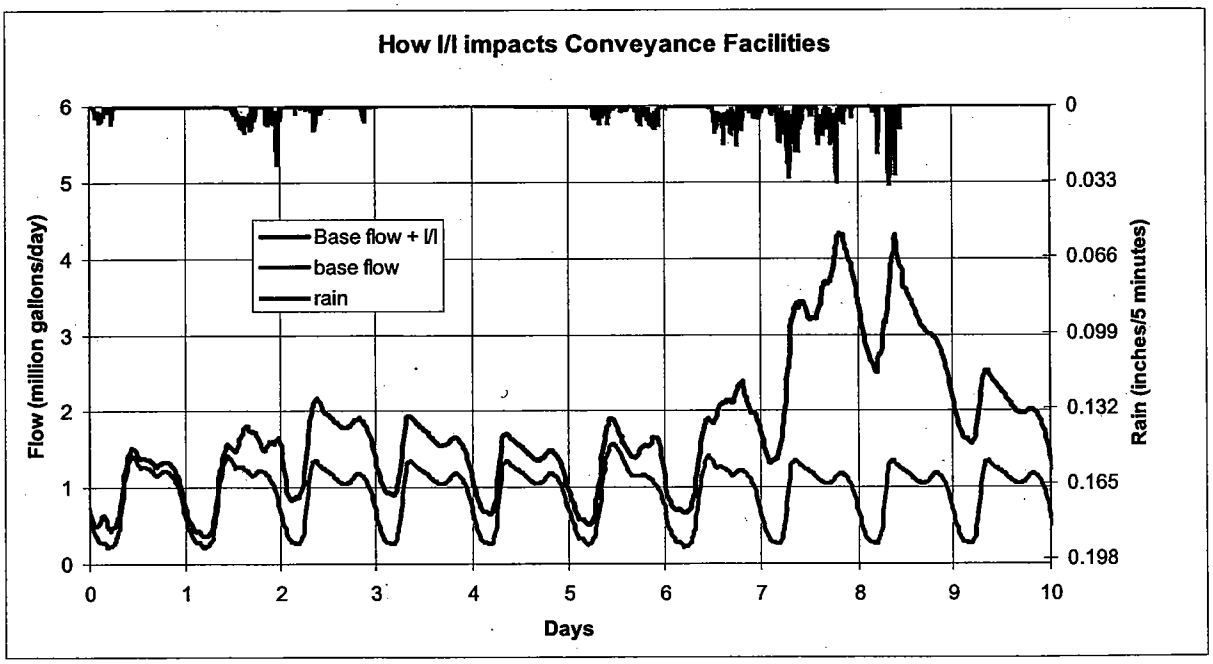

Figure 2-3. Impacts of Peak I/I on Wastewater Flows

I/I that enters the collection and treatment system also triggers higher operating costs for the region. Operating costs for conveyance facilities such as pump stations are proportional to flow volumes passing through the facilities. I/I also increases treatment costs because more chemicals and electricity are used during peak flows at the treatment plants.[1]

[1] The operating costs related to I/I were not included in the benefit-cost analysis because they are marginal when compared to the high capital costs. See Chapter 4 for details.

2.2.2 Federal Regulations

Currently, there are no federal sanitary sewer overflow (SSO) or I/I reduction policies. In 2001, the U.S. Environmental Protection Agency (EPA) proposed a draft SSO control policy.[2] The proposed SSO rule allowed for zero overflow occurrences. For the first time, municipal satellite wastewater collection agencies were to be placed under the enforcement of the Clean Water Act through adoption of new Capacity Management, Operations and Maintenance (CMOM) programs. The agencies would be required to obtain National Pollutant Discharge Elimination System (NPDES) permits and to control excessive I/I in their collection systems through specific monitoring, maintenance, and rehabilitation programs.[3]

During the current administration, the SSO rule and its accompanying CMOM requirements were placed on hold. As of July 2005, the rule has been withdrawn from publication in the Federal Register. The most recent federal activity on SSO policy was an EPA report to Congress in August 2004 titled *Impacts and Control of CSOs and SSOs.*[4] This report details the public health and environmental impacts of combined sewer overflows (CSOs) and SSOs and the costs and technologies used by municipalities to reduce these impacts. According to the report, CSOs and SSOs are a threat to public health and the environment. It proposes strategies for municipalities and regulatory agencies to adopt to reduce adverse impacts but does not make any specific policy recommendations.

Although there are no federal SSO or I/I reduction policies, several states have begun to implement their own policies and it is anticipated that federal regulations may be implemented in the future. If implemented, SSO and CMOM policies would directly affect the King County I/I control program and the local agencies served by the County wastewater system.

In the meantime, recipients of EPA grants for design and construction of wastewater treatment facilities, including expansion and modification projects, must comply with I/I analysis requirements for project certification and must reduce excessive I/I when it is cost-effective to do so.[5] Section 35.2005 of the Code of Federal Regulations, Title 40: Protection of Environment, includes EPA definitions for excessive I/I:[6]

> (16) *Excessive infiltration/inflow.* The quantities of infiltration/inflow which can be economically eliminated from a sewer system as determined in a cost-effectiveness analysis that compares the costs for correcting the infiltration/inflow conditions to the total costs for transportation and treatment of the infiltration/inflow. (See §§35.2005(b) (28) and (29) and 35.2120.)

---

[2] EPA. January 2001. *Proposed Rule to Protect Communities from Overflowing Sewers.* EPA number 833F01001.
[3] Currently, only wastewater treatment plants that discharge their effluent are required to comply with NPDES permits. The permits require recordkeeping, reporting of overflows, and maintenance of collection systems.
[4] EPA. August 2004. *Report to Congress: Impacts and Control of CSOs and SSOs.* Available online: http://cfpub.epa.gov/npdes/cso/cpolicy_report2004.cfm
[5] EPA. May 1985. *Infiltration/Inflow: I/I Analysis and Project Certification.* Available online: http://www.ecy.wa.gov/biblio/9703.html
[6] http://www.epa.gov/e pahome/cfr40.htm

(28) *Nonexcessive infiltration.* The quantity of flow which is less than 120 gallons per capita per day (domestic base flow and infiltration) or the quantity of infiltration which cannot be economically and effectively eliminated from a sewer system as determined in a cost-effectiveness analysis. (See §§35.2005(b)(16) and 35.2120.)

(29) *Nonexcessive inflow.* The maximum total flow rate during storm events which does not result in chronic operational problems related to hydraulic overloading of the treatment works or which does not result in a total flow of more than 275 gallons per capita per day (domestic base flow plus infiltration plus inflow). Chronic operational problems may include surcharging, backups, bypasses, and overflows. (See §§35.2005(b)(16) and 35.2120).

2.2.3 State Regulations

The Washington State Department of Ecology (Ecology) enforces federal Clean Water Act provisions, including NPDES permitting and water quality regulation, in Washington State.

NPDES permits require that King County immediately report to Ecology any sewer overflow, whether from the combined or separated part of the collection system. Each overflow is considered an unauthorized discharge in violation of the permits and is subject to enforcement and possible monetary penalties at the discretion of Ecology. Because I/I contributes significantly to SSO occurrences during wet weather, ongoing problems with I/I that result in overflows could be subject to Ecology or EPA Region 10 enforcement activities.

The NPDES permit for the South Treatment Plant requires biennial I/I reports that summarize progress made toward measuring I/I and toward removing I/I from the system. The permit also requires that the County institute an adequate operation and maintenance program for the entire wastewater system. The provisions are broad enough that an operation and maintenance program could be interpreted to include I/I reduction and control, and permit renewals in the future may specifically require such activities.

Finally, NPDES permits require the County to "strictly enforce their sewer ordinances and not allow the connection of inflow (roof drains, foundation drains, etc.) to the sanitary sewer system."

2.2.4 King County Code

King County Code (KCC), Section 28.84.050, stipulates wastewater disposal rules and regulations for local agencies discharging to the King County conveyance system. Subsection 28.84.050 K.3 states the following: "An additional charge will be made for quantities of water other than sewage and industrial waste hereafter entering those sewers constructed after January 1, 1961, in excess of the volume established for design purposes in this section." In addition to base wastewater flows, the established volume includes an I/I allowance of 3.06 cubic feet per acre multiplied by the sewered area in acres. Flow volumes for any 30-minute period that exceed

this allowance are considered excess flow. This I/I allowance translates to 1,100 gallons per acre per day (gpad).

Regional monitoring and modeling indicate that the I/I allowance may be unrealistically low. Most basins in the local collection systems exceed this volume. The pilot projects described in Chapter 3 could not achieve I/I reductions below approximately 3,500 gpad. Regardless of whether the 1,100-gpad flow threshold is realistic, no surcharge has yet been devised or assessed.

In addition to the I/I threshold and surcharge provisions, KCC Section 28.84.050 contains design, construction, inspection, and reporting standards for local agencies connecting to King County's conveyance system. Construction of new local public sewers and side sewers must be reported to the County and are subject to unannounced inspections by County inspectors. Further, the code prohibits direct discharge of clean groundwater or surface water to local public sewers and private sewers via roof drains, downspouts, sump pumps, or any other source.

Although the code provisions state that they are applicable to private side sewers and owners of private side sewers, in practice the local agencies have jurisdiction over private side sewer connections to the local public sewers and King County does not inspect new side sewer construction.

2.2.5 I/I Provisions in Local Agency Agreements

King County's wastewater disposal agreements with the 34 agencies that it serves address I/I control through references to Section 28.84.050 of the King County Code. These references effectively establish an I/I threshold of 1,100 gpad and a corresponding surcharge penalty for exceedance of the threshold. They also require local sewers to be constructed and maintained "in accordance with the rules and regulations of Metro (King County)."

So far, the County has not enforced these provisions. No financial incentives or penalties for I/I control have been implemented; all component agencies pay a uniform sewer rate. Enforcing the provisions is difficult because the agreements approach the threshold and surcharge in different ways. The language in 25 of the agreements exempt pipes constructed prior to 1961 from the threshold or surcharge:

> An additional charge may be made for quantities of storm or ground waters entering those Local Sewerage Facilities which are constructed after January 1, 1961 in excess of the minimum standard established by the general rules and regulations of Metro.

The agreements with the remaining nine agencies do not contain a pre-1961 pipe exemption. They allow for a charge to be assessed for I/I flows above the established threshold if an agency fails to "undertake continual rehabilitation and replacement of...local sewage facilities for purposes of preventing, reducing and eliminating the entry of extraneous water" and to "expend annually, averaged over five years, an amount equal to two cents per inch of diameter per foot of its local sewage facilities, excluding combined sewers and force mains." The language pertaining to thresholds and surcharges in these nine contracts is as follows:

> In the event the City/District fails to comply with the rehabilitation and replacement expenditure requirements described in this section, the City/District shall pay such charge as may be determined by Metro for quantities of storm or ground water entering its Local Sewage Facilities in excess of the minimum standard established by the general Rules and Regulations of Metro.

Further complicating enforcement is the high cost of monitoring flows to measure compliance. In order to enforce the provisions, continuous flow monitoring would be required at locations where flows from each local agency enter the regional system. Monitoring is impossible at connection sites where there is no nearby metering manhole. In addition, many agencies connect to the King County system at multiple locations, which would require installation of additional flow meters to isolate their flows. At a minimum, a total of 167 flow meters would be required, representing an average annual equipment and labor cost of approximately $2 million.

2.2.6 I/I Reduction Programs in Other Agencies

King County is not alone in its need to examine ways to control I/I. Wastewater agencies around the country have been facing I/I problems as their collection systems age and deteriorate and the agencies try to accommodate further growth and system expansion. In 2001, King County conducted a survey of nine regional wastewater agencies that were similar in size to WTD. The survey found that regulatory and court actions were major drivers for implementation of I/I control programs. Another major driver was the need to provide additional capacity to accommodate flows from component agencies.

Most agencies have found that I/I control efforts in the publicly owned portions of their collection systems, such as sewer mains, manholes, and the public portions of laterals, have failed to significantly reduce I/I flows. Many agencies have therefore begun to look at private side sewers and connections to the public system as significant sources of I/I control. King County and the local agencies that it serves estimate that over 50 percent of I/I originates on private property in the region. Although the agencies surveyed varied in their levels of certainty about how much I/I originates in private property sources, the contribution of I/I from private property sources is considered significant enough that agencies have been investigating possible corrective actions that would be financially, legally, and politically feasible.

Implementing I/I reduction projects on private property carries a number of challenges. The challenges include the legality of entering private property for inspection and repairs, the use of public funds to pay for the repairs, and the high costs and potential liabilities of locating I/I sources and repairing problems on multiple properties. In response to some of these challenges, many agencies have passed ordinances allowing them to access private property for inspections and repairs.[7] The ordinances have held up in several state supreme court rulings as being fair and reasonable and not in violation of the Fourth Amendment. Still, most agencies rely on voluntary homeowner participation for inspections and repairs. Many states, including Washington, prohibit the use of public funds for any private purpose. However, reducing peak I/I flows from

[7] Michael H. Simpson. July 2005. It Can Be Done: Some Legal Issues to Consider When Managing Infiltration and Inflow from Laterals. *Water Environment & Technology, 17 (7),* 26-31.

private property sources can have a clear public benefit. Benefits include promoting public health by protecting water bodies; reducing SSOs, basement backups, and other problems; and serving as cost-effective alternatives to spending more on treatment and conveyance capacity expansions.[8] Chapter 5 of this report discusses legal issues and presents recommendations regarding the use of public funds for reducing I/I on private property.

Even with all the challenges, I/I control projects on private property have been deemed successful and cost-effective by several agencies. Agencies participating in the 2001 survey reported I/I reduction rates of 17–84 percent from projects that included repair of private laterals and side sewers. These results are similar to reduction rates achieved during King County's pilot projects, ranging from 28–87 percent I/I reduction.[9] Approaches to measuring cost-effectiveness vary. Many agencies calculate a cost per gallon to treat and compare this cost with a cost per gallon to remove I/I.

2.3 King County's I/I Control Program

In recognition of the need to explore the feasibility of I/I reduction and control, the King County Council approved three I/I control policies as part of the RWSP. The RWSP was adopted in 1999 under Ordinance 13680. The policies establish the framework and process for development of a long-term regional I/I control program in collaboration with local wastewater agencies.

2.3.1 Policy Direction for I/I Control

The RWSP policies that set forth development of a King County I/I control program are as follows:

> **I/IP-1:** King County is committed to controlling I/I within its regional conveyance system and shall rehabilitate portions of its regional conveyance system to reduce I/I whenever the cost of rehabilitation is less than the costs of conveying and treating that flow or when rehabilitation provides significant environmental benefits to water quantity, water quality, stream flows, wetlands, or habitat for species listed under the Endangered Species Act (ESA).
>
> **I/IP-2:** King County shall work with component agencies to reduce I/I in local conveyance systems by the following:
>
> 1. By July 1, 2001, the King County Executive shall propose for County Council review and approval an initial list of pilot rehabilitation projects dealing with the most serious and readily identified I/I problem areas in local sewer systems.

[8] Michael H. Simpson. July 2005. It Can Be Done: Some Legal Issues to Consider When Managing Infiltration and Inflow from Laterals. *Water Environment & Technology, 17* (7), 26-31.
[9] Three of the 10 pilot projects showed no measurable I/I reduction. See Chapter 3 for details.

2. By July 1, 2002, the King County Executive shall propose an additional list of pilot projects. The pilot rehabilitation projects shall be used to demonstrate the effectiveness of I/I controls in local sewer systems tributary to the regional system.

3. By December 31, 2002, the County, in coordination with component agencies, shall develop model local conveyance system design standards, including inspection and enforcement standards, for use by component agencies to reduce I/I within their systems.

4. By December 31, 2003 (March 2005),[10] the King County Executive shall submit to the County Council a report defining I/I levels in each of the local sewer systems, based on assessments of those systems, and identifying options and the associated cost of removing I/I and preventing future increases. The options should be informed by the results of the pilot rehabilitation projects described in I/IP-2.1. The report shall present an analysis of options on cost-effectiveness and environmental costs and benefits, including, but not limited to those related to water quality, groundwater interception, stream flows and wetlands, and habitat of species listed under the ESA.

   The report shall include information on public opinion, obtained through surveys and other appropriate methods, on the role of individual property owners in implementing solutions to reducing I/I, voluntary and mandatory property owner actions, willingness to pay for reducing I/I, and acceptable community options for reducing I/I.

5. No later than December 31, 2004 (now December 31, 2005), utilizing the report described in I/IP-2.3, the King County Executive shall recommend target levels for I/I reduction in local collection systems and propose long-term measures to meet the targets. These measures shall include, but not be limited to, establishing new local conveyance system design standards, implementing an enforcement program, developing an incentive-based cost-sharing program, and establishing a surcharge program. The overall goal for peak I/I reduction in the service area should be 30 percent from the 20-year level identified in the report. The County shall pay 100 percent of the cost of the assessments and pilot projects.

I/IP-3: King County shall consider an I/I surcharge, no later than June 30, 2005 (now June 30, 2006),[11] on component agencies that do not meet the adopted target levels for I/I reduction in local collection systems. The I/I surcharge should be specifically designed to ensure the component agencies' compliance with the adopted target levels. King County shall pursue changes to component agency contracts if necessary or implement other strategies in order to levy an I/I surcharge.

[10] Completion dates for elements in the regional I/I control program deviated from the original RWSP schedule because regional flow monitoring took place over two winter seasons, rather than the one season assumed in the policies. See Chapter 3 for details.

[11] Because of the 1-year delay that resulted from an additional year of flow monitoring, the date for considering a surcharge was adjusted by a year in order to provide adequate time for the King County Council to take action on the overall I/I program recommendation and then to consider a surcharge.

2.3.2 Implementation of the Policies

In response to the RWSP policies, WTD staff, working in a consensus-based approach with local agencies, conducted a comprehensive 6-year I/I control study. The study began in 2000 and culminates with this Executive's recommendation for a regional I/I control program. It includes the following components (Figure 2-4):

- Define current levels of I/I for each local agency tributary to the regional system.
- Select and construct pilot projects to demonstrate the cost-effectiveness of collection system rehabilitation projects.
- Develop model standards, procedures, policies, and guidelines for use by local agencies to reduce I/I in their systems.
- Identify cost-effective options to remove up to 30 percent of I/I expected to occur in local agency systems during a 20-year peak flow condition.
- Develop a long-term regional I/I control plan for review and approval by the King County Council.

Major reports that have contributed to the contents of this recommendation report include the *2000/2001 Wet Weather Flow Monitoring Technical Memorandum, 2001/2002 Wet Weather Flow Monitoring Technical Memorandum, Pilot Project Report, Alternatives/Options Report, Regional Needs Assessment Report,* and *Benefit-Cost Analysis Report.* These reports and other information produced during the I/I control study can be found on the CD included with this recommendation report and on the I/I program Web site at http://dnr.metrokc.gov/wtd/i-i.

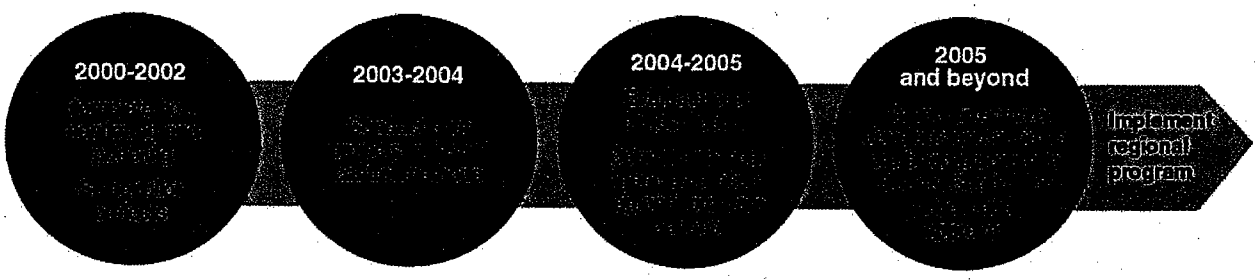

Figure 2-4. I/I Control Program Elements and Schedule

2.3.3 Consensus-Based Approach

The King County Council set forth a cooperative process for the County and local agencies to work together to develop a long-term regional I/I control program. To this end, County staff have involved local agency representatives via the Metropolitan Water Pollution Abatement Advisory Committee (MWPAAC) in key decisions throughout the 6-year study.

MWPAAC, created by state law (RCW 35.58.210), advises the King County Executive and Council on matters related to regional wastewater services and water pollution abatement. It consists of representatives from the cities and sewer districts that operate sewer systems in King County. Most of these cities and sewer districts deliver their wastewater to King County for treatment and disposal. MWPAAC's Engineering and Planning (E&P) Subcommittee worked closely with King County staff and consultants to develop this program recommendation.

During the I/I control study, the County conducted 10 workshops with local agencies and over 75 work sessions with the E&P Subcommittee. The County will continue to involve the Subcommittee in implementation of the regional I/I control program, including decisions about implementing initial I/I reduction projects.

2.3.3.1 Local Agency Workshops

Local agency workshops began in 2000 and continued through 2005. Both policy makers and technical staff attended the workshops. The purpose of the workshops was to review and reach agreement on key aspects of a regional I/I control program. Workshop topics were as follows:

1. Introduction, approach, and work plan for a regional I/I control program
2. Pilot project selection process and criteria; pilot project reimbursement and funding
3. Introduction to technical concepts
4. Financial concepts; alternatives for cost sharing
5. Modeling I/I flows
6. Design standards and rehabilitation techniques; contract management and language; private property I/I issues
7. MWPAAC RWSP Subcommittee;[12] design standards, procedures, policies, and guidelines
8. Pilot project selection
9. Pilot project update, including sewer system evaluation survey (SSES) results; schedules
10. Policy direction on draft standards, guidelines, procedures, and policies

[12] MWPAAC's RWSP Subcommittee was the precursor to the Engineering and Planning (E&P) Subcommittee. The group was expanded to include other local agency representatives interested in I/I, and in 2003, the name was changed.

2.3.3.2 E&P Subcommittee Work Sessions

In 2004 and 2005, the E&P Subcommittee worked toward reaching consensus on several complex issues related to the program recommendations contained in this report. The E&P Subcommittee's consensus decisions guided the County in developing this program recommendation and, along with input from the workshops, allowed local agencies to shape the parameters of a regional I/I control program.

Issues that were discussed and the products developed in the work sessions are as follows:

- Design standards, guidelines, procedures, and policies for I/I reduction projects
- Policies and intergovernmental agreements to guide I/I reduction projects
- Criteria for assessing the benefits and costs of I/I reduction projects
- Assumptions to be used to model capital facility needs and identify I/I reduction projects
- Assumptions for cost-effectiveness analysis of I/I reduction projects
- Issues related to I/I reduction on private property
- Issues related to financing I/I removal

2.4 Contents of this Report

This *Executive's Recommended Regional I/I Control Program* summarizes the approaches and results of the various efforts conducted since 2000 to study the feasibility of controlling I/I in King County's wastewater service area. The report concludes with a recommended long-term I/I control program.

Chapter 3 describes efforts to measure current I/I levels and to determine the effectiveness of various I/I reduction technologies. During the winter seasons of 2000–2001 and 2001–2002, approximately 800 flow meters were installed in drainage basins throughout the separated sewer system to identify sources and volumes of I/I for each local agency. Between mid 2003 and January 2004, 10 I/I pilot projects were constructed in local agency systems. Computer simulation models were developed and then calibrated using pre- and post-measured flow responses and a continuous 60-year record of storms. The models helped to establish a common basis for determining I/I reduction effectiveness and to project the 20-year peak flow rates in each basin.

Chapter 4 presents the approach and results of the benefit-cost analysis that was conducted in 2005 to identify cost-effective I/I reduction projects in local sewer systems. The benefit-cost analysis relied on information learned from the extensive flow monitoring and modeling program and from the I/I reduction pilot projects. When an I/I reduction project downsizes or eliminates the need for a conveyance facility improvement, the savings achieved (benefit) must be higher than the cost of the I/I reduction project (cost) to arrive at a positive benefit-cost ratio.

A benefit-to-cost ratio was used to measure cost-effectiveness. The ratio compares the cost of I/I repair and rehabilitation projects to the cost of conveyance system improvement and treatment plant capacity projects. The planning assumptions developed from numerous discussions with the MWPAAC E&P Subcommittee played a key role in the analysis. They included assumptions regarding rehabilitation method costs, reduction effectiveness, future conditions, and contingencies. In accordance with a consensus reached with the E&P Subcommittee, the ratio was applied on a project-specific basis rather than to the accumulated benefits of multiple projects regionally. Future analyses will evaluate the merits of allowing local agencies to contribute funding to make an I/I reduction project cost-effective.

Chapter 5 describes the recommended I/I program for King County. The recommendations are presented for I/I reduction, long-term I/I control, and program administration and policy.

Included in Appendix A of this report are references to documents used in the legal analysis of the use of public funds to conduct I/I reduction work on private property. Appendix B contains the set of draft design standards, guidelines, procedures, and policies developed jointly by the County and local agencies for use in long-term I/I control.

Chapter 3

Assessing I/I Levels and Reduction Technologies

To implement I/I policies in the RWSP, the King County Wastewater Treatment Division and the local wastewater agencies that it serves worked cooperatively to determine the extent of I/I in local collection systems and then to test methods to reduce I/I in local agency collection systems. Work began in 2000 with a regional flow monitoring and modeling effort and culminated in 2004 with the completion of 10 pilot I/I reduction projects. This chapter describes the approaches and results of these efforts.

3.1 Flow Monitoring

Starting in 2000, the County monitored wastewater flows during two wet seasons to assess I/I levels in local agency sewer systems.

3.1.1 Flow Monitoring Approach

Before installing flow meters, the County and local agencies identified and mapped model basins and mini basins:

- **Model basins** represent the sewered area flowing to specific flow meter locations. Each model basin consists of approximately 1,000 sewered acres and 100,000 lineal feet of pipe. There are 147 model basins in the King County Wastewater Service Area. Some of the model basins straddle agency boundaries because of agreements between agencies to "pass through" flows to the County conveyance system.
- **Mini basins** are further subdivisions of model basins that geographically isolate variation in I/I flow rates within the model basins. There are 650 mini basins in the service area. On average, each mini basin consists of 150 acres and 22,000 lineal feet of pipe.[1]

Approximately 800 flow meters were installed throughout the region in areas with separated sewers (Figure 3-1). The meters were first installed during the 2000–2001 wet-weather season. Because that winter brought an unseasonably low number of storms and yielded insufficient wet-weather flow data, the 2000–2001 data were used to calculate base flows only. The meters were reinstalled during the 2001–2002 wet-weather season to measure peak flows. Several rainfall

[1] There is an average of five model basins per local agency; the maximum number of model basins (17) is in Bellevue. The average number of mini basins in a model basin is five. The maximum number of mini basins per model basin is 13, and the minimum number is 1 (the model basin and the mini basin are the same). The average number of mini basins per agency is 23; the maximum is 117, once again in Bellevue. Five of the local agencies have just one mini basin.

events during the 2001–2002 season produced sufficient peak wet-weather flow measurements to calculate I/I volumes.

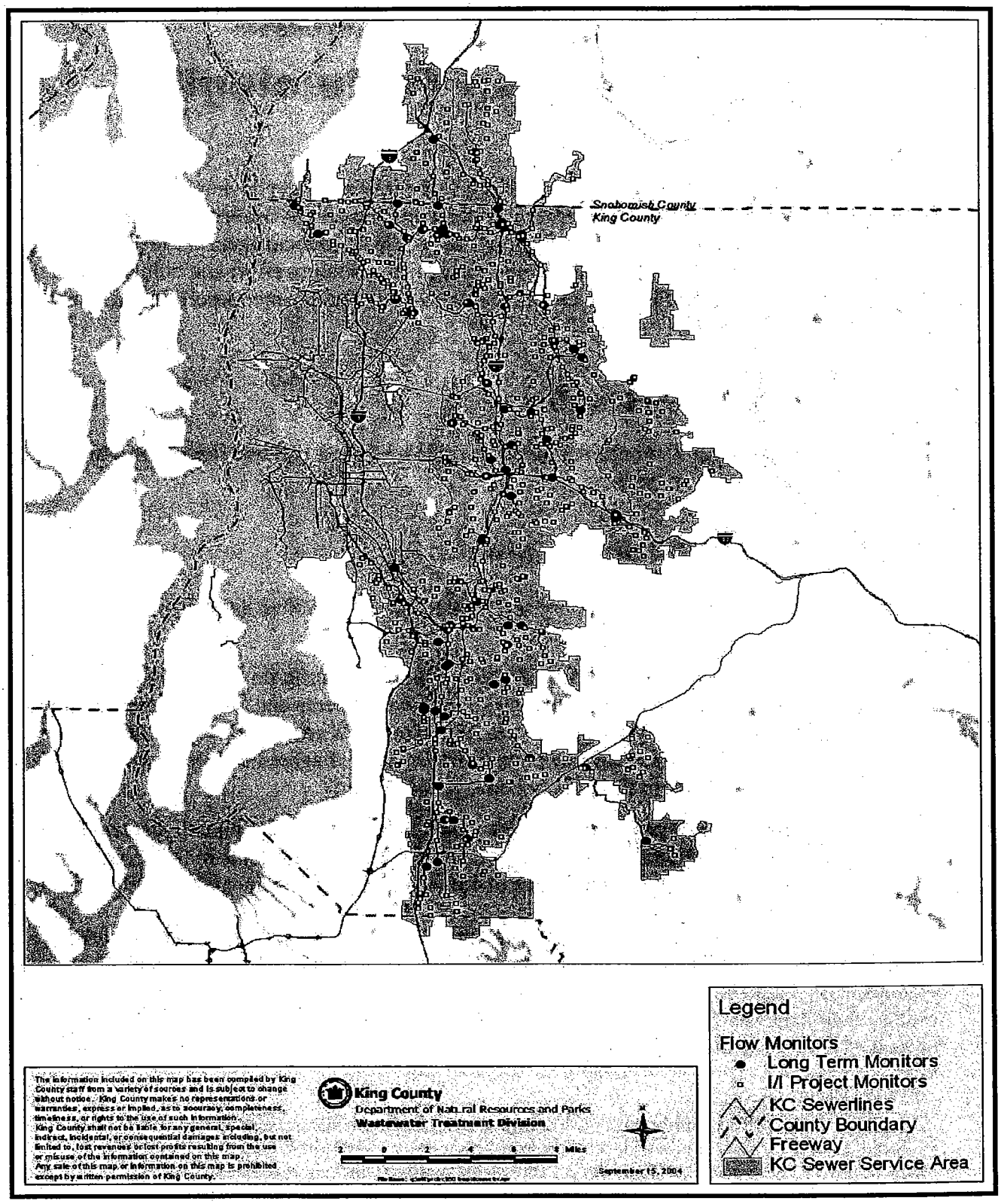

Figure 3-1. Flow Meter Locations

3.1.2 Flow Monitoring Results

Results of the 2001–2002 flow monitoring provided important information about the locations of the highest levels of I/I in the region and insight into the ways that I/I enters local agency collection systems and then the regional conveyance system. The results show a wide variation in I/I flow rates and volumes during storm events across the collection and conveyance systems. I/I flow rates in the various mini basins range from a low of less than 1,100 gallons per acre per day (gpad) to a high of over 65,000 gpad.

Information on how quickly I/I flows rise and fall in a particular mini basin during and after storm events helped to identify how I/I is getting into the systems. Rapid **inflow** of water that corresponds closely with a peak rainfall event comes mostly from private property, typically from downspout connections to the sanitary sewer system, cracked side-sewer pipes, foundation drains, and sump pumps. Although not typical, rapid inflow can also occur from public portions of the system, including storm drain connections to the sanitary sewer and leaky manholes. Slow **infiltration** of water into the collection system typically comes from saturated soils or groundwater and results in higher I/I flows remaining in the system for several days after the conclusion of a storm event. Slow infiltration typically finds its way into the system via leaky manholes, cracks in publicly owned sewer mains, and cracks in laterals that can either be publicly or privately owned, depending on the ownership rules in place in the jurisdiction.

3.2 Flow Modeling

After sufficient flow monitoring data were collected, King County and the local agencies used this flow monitoring data and other data to model existing flows and to project future flows in the system. The purpose of the modeling was to determine the condition of the regional conveyance system and to measure its long-term capacity to convey existing and projected wastewater flows.

3.2.1 Flow Modeling Approach

The County acquired new hydraulic modeling software—MOUSE™ (Modeling of Urban Sewers)—a PC-based computer model with a graphic interface to GIS. Use of a commercial modeling package rather than an in-house modeling program allowed the County and local agencies to easily share and analyze modeling results. The MOUSE™ modeling software was selected through a rigorous competitive process in which three software packages were evaluated for technical capability and cost. (For a description of the model selection process, see Appendix A1 of the *Regional Needs Assessment Report.)*

To ensure that modeled flow projections were accurate, the model was calibrated by comparing model results to measured data. Both the hydrologic and hydraulic components of the model were calibrated to base flow and I/I data collected during the 2000–2002 flow monitoring periods. Other inputs to the calibration included a 60-year rainfall record and basin-specific pipe and service area information. The calibrated basin models were then used to simulate I/I flows that could occur in the regional system over a 60-year period. The results of this 60-year

simulation were used to estimate the 20-year peak flow in gpad for each model basin.[2] The estimated peak flow served as an indicator for the performance of each local agency system.

The general strategy for modeling I/I and wastewater flows was to input rainfall and flow data into the model and calibrate the continuous *hydrologic* portion of the model to the rainfall response for the model basins and mini basins in the regional service area. Once good calibration was achieved, a long-term (60-year) rainfall data set was used to "run" each model basin to model long-term flow. The modeled long-term flows were analyzed statistically to determine the 20-year peak flow produced in each model basin. These peak flows from the model basins were applied (input) to a hydraulic model of the County conveyance system. The *hydraulic* model was then run to analyze how the system performs under existing 20-year peak flow conditions.

Definitions of Modeling Terms

Hydrologic model. A model used to numerically simulate the physical process of rainfall becoming I/I.

Hydraulic model. A model of the actual pipes that convey the wastewater and I/I generated by the hydrologic model. The hydraulic model outputs flow depths and velocities in specific pipe segments and allows for the evaluation of system performance under existing and future demands.

Basin. A geographic area that contributes flow to a specific location, usually a flow meter or a facility. The two primary types of basins used in the assessment are **model basins** and **mini basins**.

Model calibration. The process of adjusting model parameters so that the model output matches the measured sewer flow for the same time period.

Once the existing 20-year peak flows for the current conditions were established (assumed to be year 2000), future flow conditions were projected. The projections involved applying assumptions related to sewered growth, existing I/I rates, and I/I rates from areas to be served by sewers in the future. For a more detailed discussion of the flow modeling process, see the *Regional Needs Assessment Report.*

3.2.2 Flow Modeling Results: I/I Flow Projections

Figures 3-2 and 3-3 illustrate the projected peak I/I flow rates by model basin and mini basin for the portion of the regional service area served by separated sewers. The figures show that projected peak I/I levels in the basins vary from less than 1,100 to over 30,000 gpad and that relatively low and high projected peak I/I flows are dispersed throughout the region. Any approach to reducing I/I levels would need to account for this variation by implementing projects on a case-by-case basis across the region.

Everyday examples of flow rates...

- A rate of 1,440 gpad would be produced by a flow of 1 gallon per minute from 1 acre of land. A single continuously running flow-restricted kitchen faucet typically produces 1 gallon per minute of flow.
- A rate of 4,320 gpad is the same as the flow produced by a continuously running shower, which typically flows at about 3 gallons per minute.
- A rate of 7,200 gpad would be the equivalent flow produced from an unattended garden hose, which typically produces a flow of about 7 gallons per minute.

[2] The County defines peak flow as the highest combination of base flow and I/I expected to enter a wastewater system during wet weather at a given frequency that treatment and conveyance facilities are designed to accommodate.

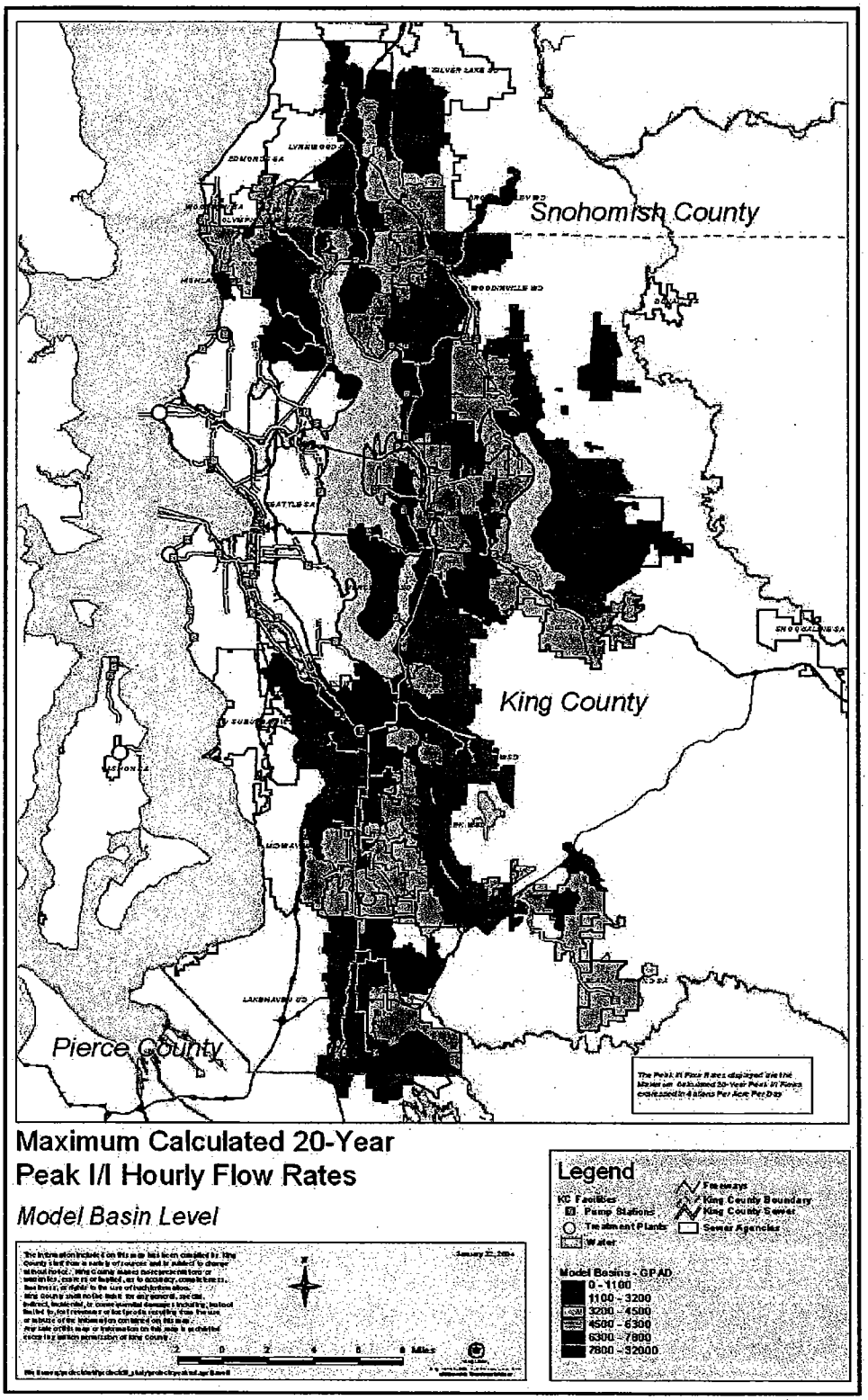

Figure 3-2. Peak Flow Projections for Model Basins

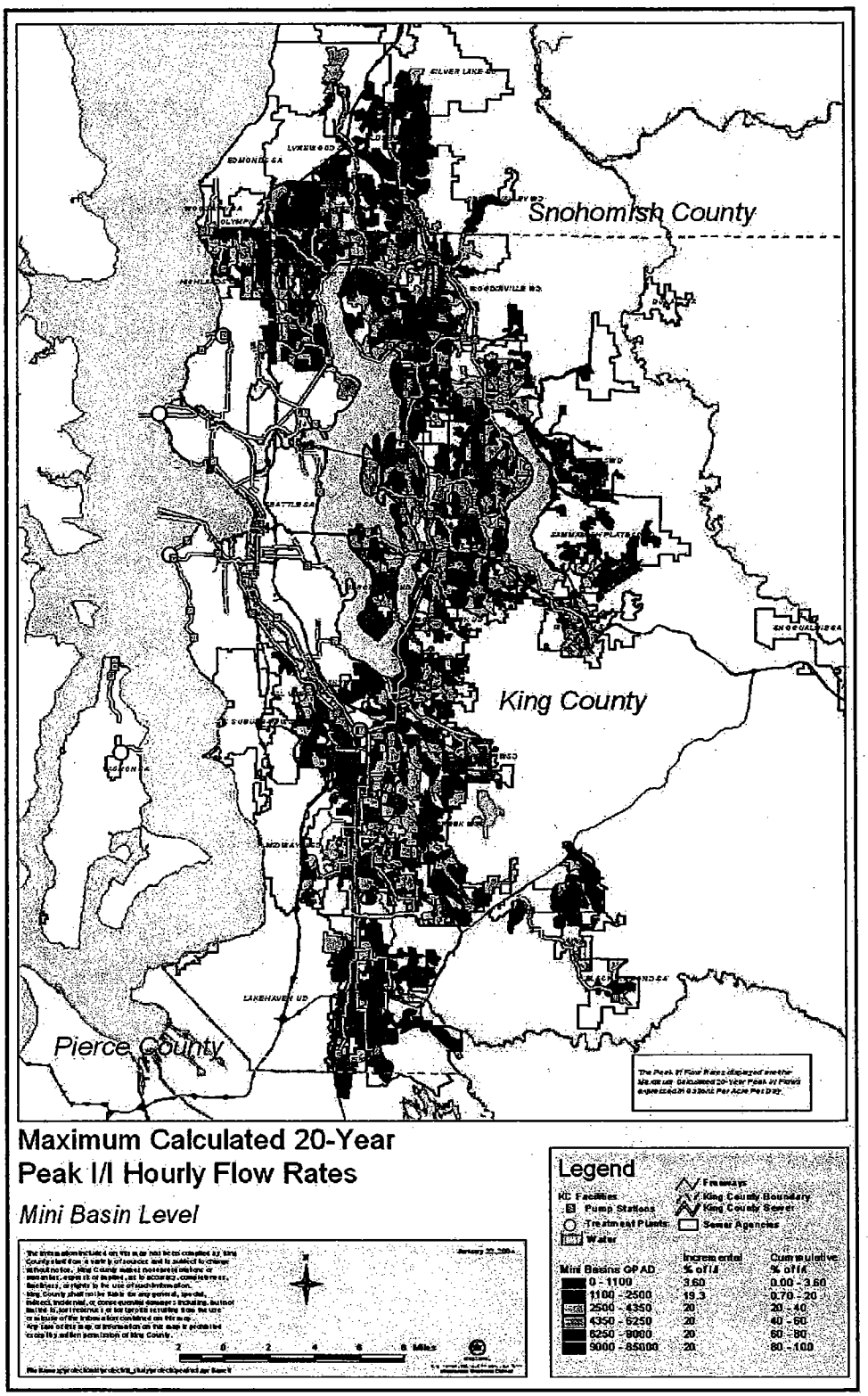

Figure 3-3. Peak Flow Projections for Mini Basins

3.3 I/I Reduction Analysis

King County and the local agencies conducted two major analyses to determine the feasibility of reducing I/I levels through rehabilitating collection system components: (1) a national review of I/I programs and (2) implementation of 10 pilot I/I reduction projects in the region.

3.3.1 National I/I Program Review

In 2001, a survey was conducted of nine wastewater agencies similar in size and function to King County's Wastewater Treatment Division. A key objective of the survey was to gather information about I/I reduction approaches that have worked elsewhere and their applicability to King County's service area.

3.3.1.1 Survey Approach

Table 3-1 lists the names and locations of the nine wastewater agencies that were surveyed. The surveys focused on gathering the following information from each agency:

- Catalysts for implementing local I/I reduction programs
- Rehabilitation methods employed
- System components rehabilitated
- Cost and effectiveness of rehabilitation methods
- Applicability to the regional program

Table 3-1. Agencies Surveyed for I/I Reduction Programs

Agency	Location
Bureau of Environmental Services	Portland, Oregon
Clean Water Services	Washington County, Oregon
Detroit Water & Sewerage Department	Detroit, Michigan
East Bay Municipal Utility District	Oakland, California
City of Houston Public Works Department	Houston, Texas
Metropolitan Council of Environmental Services	Minneapolis-St. Paul, Minnesota
Metro Water Services	Nashville, Tennessee
Miami-Dade Water & Sewer District	Miami, Florida
Milwaukee Metropolitan Sewer District	Milwaukee, Wisconsin

3.3.1.2 Survey Results

The I/I reduction programs in the agencies surveyed were primarily prompted by regulatory or court action and also by the need to provide capacity for tributary agencies. For example, the need to provide capacity is driving Milwaukee to develop a regional I/I reduction program that will include rehabilitation of its trunk lines. The construction of a major new interceptor in Milwaukee has now made the original trunk lines available for inspection and rehabilitation. Many agencies such as East Bay have completed system rehabilitation as part of their original I/I programs and are continuing to rehabilitate as part of their overall maintenance programs.

The rehabilitation methods used most extensively are cured-in-place pipe lining (CIPP) and dig-and-replace. Other rehabilitation methods reported include fold-and-form, pipe bursting, point repairs, slip lining, manhole coatings, pressure grouting, and manhole seals.

Lateral rehabilitation constituted a major portion of the rehabilitation efforts of several of the agencies surveyed, including Nashville, Miami, Washington County, Oakland, and Portland. The Nashville, Oakland, and Portland I/I reduction programs included rehabilitation and replacement of the portion of the laterals located on private property (side sewers). Lateral rehabilitation methods were primarily CIPP and dig-and-replace.

Most of the agencies surveyed conducted little or no post-rehabilitation flow monitoring to quantify the I/I removed from their systems and, in general, did not rigorously quantify the cost of I/I removal for specific rehabilitation projects.

3.3.1.3 Applicability to King County's I/I Program

A common finding from the agency surveys was that rehabilitation of privately owned laterals and side sewers was an important component in achieving measurable reductions in I/I levels. Total basin rehabilitation—rehabilitation and/or replacement of mains, manholes, laterals, and side sewers in a basin—ultimately appeared to be the most effective solution for significant I/I reduction and could serve as an appropriate approach to rehabilitating portions of the collection system that have uniformly degraded over time.

The survey results helped to reinforce the approaches that were considered in designing and constructing pilot I/I reduction projects in the region. King County and the local agencies were interested in testing "trenchless" rehabilitation technologies, such as pipe bursting and slip lining, that had been successfully employed in other regions of the country and in testing the effectiveness of rehabilitating privately owned side sewers and laterals. The fact that trenchless technologies and rehabilitation of privately owned system components were common elements of successful I/I reduction programs elsewhere reinforced the decision to include these elements in pilot I/I reduction projects here.

The survey results were not as useful in helping to devise a method of measuring the cost-effectiveness of I/I reduction. The County and local agencies therefore jointly developed a detailed method for estimating the costs and benefits of I/I reduction projects. (See Chapter 4 for a complete discussion of the costs and benefits of I/I reduction.)

3.3.2 Pilot I/I Reduction Projects

RWSP Policy I/IP-2 directs King County to work cooperatively with local agencies to select and complete pilot I/I reduction projects. The pilot projects were completed in 2003 and 2004. The purposes of the projects were as follows:

- Demonstrate the effectiveness of various I/I reduction technologies in local agency sewer systems tributary to the regional conveyance and treatment system.
- Generate data regarding the unit costs for various reduction technologies and the effectiveness of the various technologies tested.
- Learn about the effectiveness (both in terms of cost and I/I reduction) of working on publicly and privately owned portions of the collection system.

The scope and scale of the pilot projects were governed by the County's $9 million pilot project construction budget. Data generated from the pilot projects were instrumental in providing inputs to the I/I benefit-cost analysis described in Chapter 4. However, none of the pilot projects, either individually or collectively, was of sufficient scale to test the cost-effectiveness of I/I reduction in relation to constructing larger conveyance system components. Field testing the cost-effectiveness of I/I reduction would require the construction of an I/I reduction project at a scale large enough to reduce peak flows to a point where a planned conveyance system improvement project is delayed, downsized, or eliminated.

3.3.2.1 Pilot Project Selection

The local agencies developed 10 criteria to be used to select the locations of the pilot projects and the types of technologies to be implemented in the projects. Projects were to be distributed throughout the region to provide geographic balance. The other nine criteria were as follows:

- Meet constructability time frame for the I/I program, including permitting needs
- Consider differing geologic conditions/do no harm
- Provide environmental and public health benefits
- Address private sewer issues
- Provide a regional impact
- Serve as useful models for future I/I projects
- Demonstrate a variety of proven technologies and rehabilitation techniques
- Represent typical I/I problems in the region
- Contribute to program goals (this "wild card" criterion was included for projects that could potentially satisfy conditions that were not anticipated during criteria development)

To aid the selection process, the County and local agency staff presented information about candidate basins, including flow data, age of sewer system, and type of pipe. Local agencies proposed 23 pilot projects for consideration. In April 2002, the local agencies reviewed and

discussed the merits of each project, then voted to select the top 10 projects for construction. They selected nine basins to host distinct pilot projects and three basins to be combined into a single pilot project focused on manhole rehabilitation, for a total of 10 projects in 12 pilot basins.

The pilot projects included a mix of projects on public and private property in 12 local agency jurisdictions (Figure 3-4): City of Auburn, City of Brier, Skyway Water and Sewer District (formerly known as Bryn Mawr), Coal Creek Utility District, City of Kent, City of Kirkland, City of Lake Forest Park, City of Mercer Island, Northshore Utility District, City of Redmond, Ronald Wastewater District (formerly known as Shoreline Wastewater Management), and Val Vue Sewer District. The combined Coal Creek, Northshore, and Val Vue projects made up the "Manhole Project."

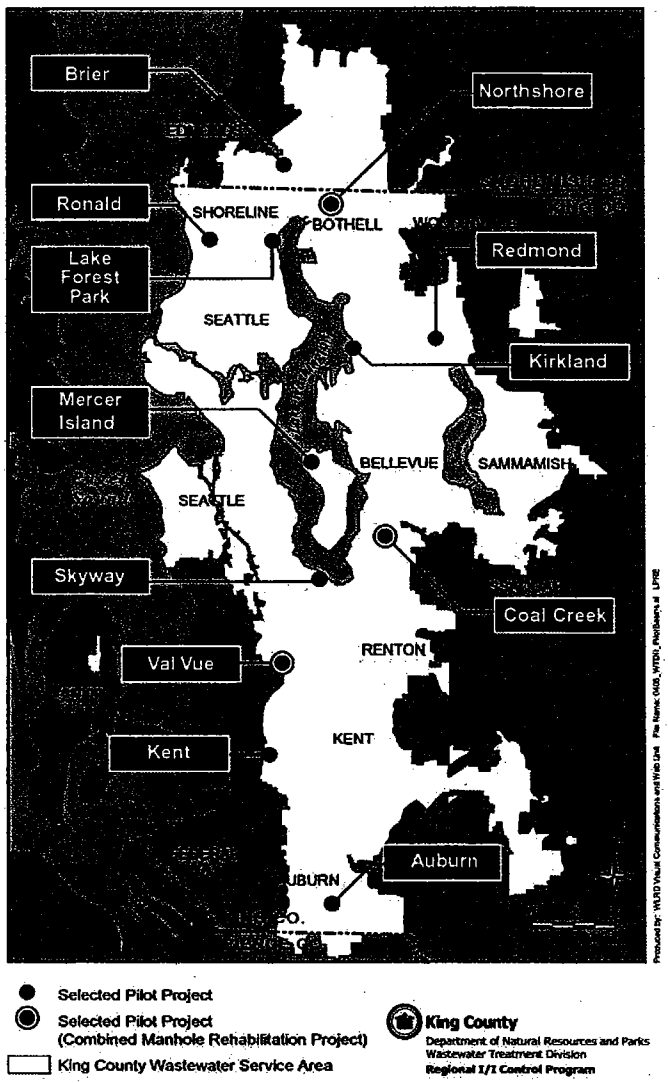

Figure 3-4. Pilot Project Locations

3.3.2.2 Pilot Project Approach

Work on each pilot project consisted of identifying I/I sources through field investigations, designing and constructing rehabilitation improvements, and monitoring post-construction flows to determine the effectiveness of the rehabilitation.

In the second half of 2002, sewer system evaluation surveys (SSES) were performed to support selection and detailed design of the I/I control technologies to be tested in each pilot project location. A key objective of the pilot projects was to gain experience with a variety of sewer system repair technologies in manholes, mains, laterals, and side sewers (Table 3-2). Technologies tested by the pilot projects included lining pipes using various cured-in-place materials, replacing pipes by pipe bursting or open-cut methods, replacing manholes, rehabilitating manholes by using chemical grouting or epoxy injection and by adjusting frames and covers, and installing cleanouts.

Table 3-2. Rehabilitation in Local Sewers

	Mains	Manholes	Laterals	Side Sewers
Auburn	●	●	●	●
Brier	●	●		
Coal Creek		●		
Kent			●	●
Kirkland	●	●	●	
Lake Forest Park	●	●		
Mercer Island	●			
Northshore		●		
Redmond	●	●	●	
Ronald			●	●
Skyway	●	●	●	●
Val Vue		●		

3.3.2.3 Pilot Project Results

The pilot projects provided valuable insights into implementation, costs, and I/I reduction rates. The most important lessons learned were as follows:

- Flow monitoring can detect sources and volumes of I/I
- Targeted sewer rehabilitation can reduce I/I
- A high percentage of I/I tends to originate in side sewers and laterals
- Strong collaboration between the County and local agencies was an important factor in successfully identifying, targeting, and reducing I/I

The projects illustrated that areas with I/I can be identified through comprehensive wet-weather flow monitoring and that identifying system defects is most effective when the SSES is completed during wet weather. Several sources of infiltration that eluded detection through the SSES completed during the dry season were subsequently identified during pilot project construction and post-rehabilitation inspection work completed during the wet season.

Rehabilitation technologies reduced I/I in eight of the ten pilot projects (Table 3-3). The highest reduction (87 percent) occurred in Skyway, where the entire system within the pilot project area

was rehabilitated. Reductions in Kent (76 percent) and Ronald (74 percent) were also high. All three projects included rehabilitation of laterals and side sewers on private property. The high I/I reductions in these areas corroborate the assumption that a large percentage of I/I originates on private property. The relatively low reduction rate (37 percent) for the publicly owned sewer main rehabilitation project on Mercer Island further corroborates this assumption.

Pilot projects in Auburn and Redmond yielded no measurable I/I reduction, most likely because only a small percentage of each basin was rehabilitated and therefore the impact on the overall I/I rate was small. The Manhole Project resulted in no measurable reduction in Coal Creek and Val Vue and only 23 percent reduction in Northshore. These results suggest that very little I/I reduction can result from manhole rehabilitation alone.

Another important lesson learned was that I/I control would not have been possible without the support of local agencies and private property owners. Owners were engaged before, during, and after the projects through public information and education, property owner incentives, and active local agency participation. The owners helped to locate cleanouts and refrained from using the sewers during construction.

Finally, even though the greatest reductions may occur from rehabilitating side sewers and laterals, experience with the Skyway project and with expanded bids for the Kent and other projects indicates that rehabilitating sewer mains at the same time as side sewers and laterals can be done for a relatively small increase in cost.

The final construction cost for the 10 pilot projects was $7.8 million. Local agencies contributed $0.67 million; King County contributed the remaining $7.13 million. In addition to construction costs, total pilot project costs shown in Table 3-3 included costs for SSES, design, pre- and post-rehabilitation flow monitoring, construction management, modeling, and analysis.

Table 3-3. Summary of I/I Pilot Project Results

	Mains	Manholes (MH)	Laterals (L)	Side Sewers (SS)	% of Basin Improved[a]	20 Year Peak I/I[b] Pre-Rehab (gpad)	Post-Rehab (gpad)	Reduction %	Construction Cost	Total Cost[d]
Auburn	●	●	●	●	11% of mains	8,900	8,900	NMR	$384,700	$749,400
Brier	●	●			23% of mains	10,100	5,000	50%	$372,700	$820,400
Kent			●	●	100% of L and SS	12,700	3,100	76%	$1,080,700	$1,446,900
Kirkland	●	●	●		25% of mains	11,000	7,900	28%	$838,200	$1,190,400
Lake Forest Park	●	●			35% of mains	22,500	7,100	69%	$790,400	$1,228,900
Manhole Project		●				17,800	16,300	23%[c]	$200,800	$660,200
Mercer Island	●				70% of mains	8,200	5,200	37%	$815,800	$1,218,600
Redmond	●	●	●		36% of mains	1,000	1,000	NMR	$840,100	$1,273,400
Ronald			●	●	72% of L and SS	18,200	4,800	74%	$1,077,300	$1,531,400
Skyway	●	●	●	●	100% of mains	63,200	8,400	87%	$1,395,200	$1,883,900

NMR = no measurable reduction.

[a] "% Improved" refers to the percentage of the identified elements of the sewer system that were rehabilitated during the pilot project.

[b] The 20-year peak pre-rehabilitation I/I rate is a model-predicted rate; the I/I rates used to select the pilot projects were the measured I/I rates for the maximum storm observed during the flow monitoring period.

[c] The pre- and post-rehabilitation flows shown for the Manhole Project are the combined flows for all three basins in the project. The 23 percent reduction occurred in the Northshore basin; there was no measurable reduction in the Coal Creek and Val Vue basins.

[d] In addition to construction costs, total pilot project costs include costs for SSES, design, pre- and post-rehabilitation flow monitoring, construction management, modeling, and analysis.

Chapter 4

Benefit-Cost Analysis

In addition to the RWSP I/I policies described in Chapter 2, conveyance system policy calls for the integration of I/I study results with planning for wastewater conveyance and treatment facilities (Policy CP-5). The results of the benefit-cost analysis presented in this chapter identify cost-effective I/I reduction projects that have the potential to reduce the capital investments necessary to upgrade the conveyance system. Greater detail can be found in the *Benefit-Cost Analysis Report.*

4.1 Benefit-Cost Analysis Approach

The Benefit-Cost Analysis Tool (B/C Tool) was developed to conduct the benefit-cost analysis for the I/I control program. B/C Tool is a database analysis tool that runs on a Microsoft Access platform and has the ability to evaluate a myriad of variables. The tool was used to determine the optimal I/I reduction available and then to generate a list of cost-effective I/I reduction projects based on regional conveyance needs.

Major inputs to B/C Tool were as follows:

- **Conveyance system improvement (CSI) projects.** A Regional Needs Assessment (RNA) was completed in early 2005 as a part of the I/I control study. The RNA identified CSI projects that would be needed to accommodate peak flows[1] through 2050—the projected date when the regional wastewater service area will be fully built out and all portions of the service area will be connected to the wastewater treatment system.
- **Assumptions regarding sizing, costs, I/I reduction potential, and other planning factors.** Most of the assumptions were developed in coordination with MWPAAC's Engineering and Planning (E&P) Subcommittee.[2] They are based on industry standards, experience in operating wastewater systems in the region, and results of the research and I/I pilot projects conducted for the I/I control study.

  The set of assumptions regarding I/I reduction rates was intentionally made conservative for the benefit-cost analysis to avoid potential overestimation of benefits or underestimation of costs. A set of initial assumptions that was less conservative and based on direct experiences in the pilot projects was used to conduct a sensitivity analysis that would provide the upper end of the range for cost-effectiveness outcomes.

[1] Peak flow is the highest combination of base flow and I/I expected to enter a wastewater system during wet weather at a given frequency that treatment and conveyance facilities are designed to accommodate.
[2] MWPAAC = Metropolitan Water Pollution Abatement Advisory Committee.

- **Flow data collected during the I/I study and flow predictions based on the data.** Extensive flow monitoring data were used in commercially available hydrologic and hydraulic models to estimate present and future conveyance system capacity needs. These modeled estimates were supported by information regarding local agency wastewater facilities, current and future land uses, population projections, and other modeling assumptions.
- **Results of the I/I pilot projects.** Lessons learned from the 10 pilot projects about costs and effectiveness of I/I reduction techniques were an important input to assumptions used in the benefit-cost analysis.
- **Definition of cost-effectiveness of I/I reduction projects.** RWSP Policy I/IP-1 calls for the reduction of I/I "whenever the cost of rehabilitation is less than the cost of conveying and treating the flow or when rehabilitation provides significant environmental benefits to water quantity, water quality, stream flows, wetlands, or habitat for species listed under the ESA."[3] For the purpose of the benefit-cost analysis, this definition was further refined to clarify that cost-effective projects are those for which the capital savings that result from I/I reduction exceed the costs of constructing the I/I project. When an I/I reduction project delays, downsizes. or eliminates the need for a conveyance facility improvement, the savings achieved (benefit) must be higher than the cost of the I/I reduction project (cost) to arrive at a positive benefit-cost ratio (greater than 1).
- **Alternative methods for applying cost-effectiveness of I/I reduction.** The *Alternatives/Options Report* identified three alternatives for considering cost-effectiveness: project-specific basis, region-wide basis, and a 30-percent I/I reduction goal. This report presents detailed benefit-cost analysis results for the project-specific alternative (preferred alternative) and summarizes results for the other two alternatives. Detailed results for all alternatives are presented in the *Benefit-Cost Analysis Report.*

4.2 Conveyance Projects Identified in the Regional Needs Assessment

This section describes the CSI projects identified during the Regional Needs Assessment, compares these projects to the CSI projects identified in the 2004 update to the *Regional Wastewater Services Plan* (RWSP), and then shows the locations of the RNA projects in relation to predicted I/I flows for each mini basin.[4] The projects identified are based on the data gathering and modeling efforts completed for the I/I control study. The RNA was developed to allow for an accurate comparison of benefits and costs between CSI projects and I/I reduction projects. More detail is provided in the *Regional Needs Assessment Report.*

[3] Endangered Species Act (ESA).

[4] Mini basins are geographically isolated areas that show variation in I/I flow rates. There are 775 mini basins. On average, they are 150 acres and contain approximately 22,000 lineal feet of pipe. See the *Regional Needs Assessment Report* for a more detailed discussion of mini basins.

4.2.1 CSI Projects

The RNA identified 63 CSI projects that would expand the capacity of the conveyance system to meet the region's projected capacity needs through 2050. Table 4-1 lists each project, including the project type and estimated completion date and cost. Figure 4-1 identifies the location of the projects by the project numbers listed in Table 4-1.

The estimated cost for all CSI projects through 2050 is approximately $780 million (2003 dollars). To provide a baseline for conducting the benefit-cost analysis, the cost estimate assumes that no action will be taken to reduce capacity demand by reducing flow volumes—that the rate of growth in base flow will grow as population and employment grow in the region and that I/I will continue unchecked into the future.[5]

Projects 1 through 23 in Table 4-1 were not included in the benefit-cost analysis. The capacity provided by these projects is needed prior to 2010. It is not possible to design, construct, and test I/I reduction projects in time to alleviate the need for this capacity.

4.2.2 Comparison with CSI Projects Identified in the Updated RWSP

The 2004 update to the RWSP listed CSI projects through 2030, with a total estimated cost of $638 million (2003 dollars). The flow monitoring and modeling data developed for the I/I control program indicate that I/I levels in certain areas of the region differ from the assumptions used to update the RWSP. The comparison of these modeled flows to the capacity of the conveyance system resulted in the addition of 10 projects[6] and the deletion of two projects[7] from the list of projects identified in the update to the RWSP. The additional projects increased the estimated costs for projects through 2030 by $10 million, for a total of $648 million. For the projects between 2031 and 2050 identified in the RNA, the estimated cost is $131 million.

[5] Population and employment growth rates are taken from Puget Sound Regional Council (PSRC) forecasts.
[6] Projects 28, 29, 31, 33, 35, 42, 44, 45, 47, and 50 in Table 4-1.
[7] Effluent Transfer System (ETS) Storage project and Tukwila Freeway Crossing project.

Table 4-1. Conveyance System Improvement Projects Identified in the Regional Needs Assessment

Project No.	Project List	Project Type	Year Online[a]	Estimated Project Cost[b]
1	Bear Creek Interceptor Extension	Gravity Line	1998	$400,000
2	Alderwood	Acquisition of Facilities	2001	$16,700,000
3	Swamp Creek	Gravity Line	2003	$10,700,000
4	ESI-11 - Wilburton Siphon/Wiburton Odor Control	Gravity Line	2003	$3,900,000
5	Off-line Storage at North Creek	Storage Facility	2004	$33,800,000
6	ESI-1 (2)	Gravity Line	2004	$8,700,000
7	Fairwood Interceptor (formerly Madsen Creek)	Gravity Line	2005	$21,600,000
8	McAleer I/I Work	I/I rehab work (opportunity)	2005	$3,200,000
9	Pacific Pump Station	Pump Station Upgrade	2006	$7,800,000
10	York PS Subtotal	Pump Station Upgrade	2007	$10,000,000
11	Lake Line Connections and Flap Gates	Gravity Line	2007	$1,400,000
12	Juanita Bay Pump Station	Pump Station	2007	$33,100,000
13	Sammamish Plateau WSD	Acquisition of Facilities	2007	$9,400,000
14	Hidden Lake PS/Boeing Trunk	Pump Station Upgrade and Gravity Line	2008	$28,500,000
15	Kirkland Pump Station and Force Main Upgrade	Pump Station and Force Main Upgrade	2008	$9,600,000
16	Auburn	Interceptor Extension	2008	$11,500,000
17	[CSI] North Creek 1-A	Gravity Line	2009	$16,900,000
18	[CSI] Stuck River Diversion 1	Gravity Line	2009	$5,200,000
19	[CSI] Stuck River Diversion 2	Gravity Line	2009	$2,300,000
20	[CSI] Auburn West Valley Replacement - Section C	Gravity Line	2009	$12,400,000
21	[CSI] Auburn West Valley Replacement - Section A	Gravity Line	2009	$2,900,000
22	[CSI] Auburn West Valley Replacement - Section B	Gravity Line	2010	$25,200,000
23	[CSI] Soos Alternative 3A(3) - PS D w/ Conveyance	New Pump station, Force Main and Gravity Sewers	2010	$35,700,000
24	South Lake City: NWW13-02 TO NWW10-01	Gravity Line	2011	$100,000
25	[CSI] Soos Alternative 3A(3) - PS H w/ Conveyance	New Pump station, Force Main and Gravity Sewers	2011	$42,700,000
26	Piper Creek: T-12 to T-5	Gravity Line	2012	$500,000
27	Piper Creek: T-23 D TO T-12	Gravity Line	2013	$2,200,000
28	Issaquah1 Trunk Pipeline Bifurcation	New Gravity Line	2014	$1,400,000
29	Bellevue Influent Trunk	New Gravity Line	2015	$2,600,000
30	North Mercer and Enatai Interceptors	New Gravity Line	2016	$10,800,000
31	Medina Trunk Minor Upgrade	New Gravity Line	2019	$100,000
32	[CSI] Thornton Creek Interceptor - Sections 1 & 2	New Gravity Line	2019	$3,300,000
33	Bryn Mawr Storage	New Storage Facility	2020	$8,200,000
34	[CSI] Coal Trunk Replacement	New Gravity Line	2020	$6,800,000
35	Factoria Trunk and Wilburton Upgrade	New Gravity Line, Pump Station Upgrade	2020	$27,900,000
36	[CSI] Sammamish Plateau Diversion	New Gravity Line	2020	$18,800,000
37	[CSI] Thornton Creek Interceptor - Section 3	New Gravity Line	2022	$2,400,000
38	[CSI] Mill Creek Relief Sewer	New Gravity Line	2022	$5,000,000
39	North Soos Creek Interceptor	New Gravity Line	2022	$5,600,000

Project No.	Project List	Project Type	Year Online[a]	Estimated Project Cost[b]
40	Heathfield/Sunset Pump Station and Force Main Upgrade	New Force Main, Pump Station Upgrade	2022	$16,000,000
41	Eastgate Trunk	New Gravity Line	2022	$1,800,000
42	Medina New Storage	New Storage Facility	2023	$3,600,000
43	[CSI] Soos Alternative 3A(3) - PS B w/ Conveyance	New Force Main, New Pump, New Gravity Line	2023	$10,600,000
44	Northwest Lake Sammamish Interceptor	New Gravity Line	2024	$28,900,000
45	Rainier Vista Trunk	New Gravity Line	2024	$600,000
46	Garrison Creek Trunk	New Gravity Line	2024	$12,900,000
47	Lake Hills Trunk Fourth Barrel Addition	New Gravity Line	2025	$12,400,000
48	[CSI] North Creek 2-A	Gravity Line	2026	$45,500,000
49	[CSI] Swamp Creek Parallel - Section 1B	New Gravity Line	2026	$7,300,000
50	Algona Pacific Trunk Stage 1	New Gravity Line	2026	$4,300,000
51	[CSI] Issaquah New Storage	New Storage Facility	2026	$15,100,000
52	[CSI] Sammamish Plateau Storage	New Storage Facility	2027	$20,500,000
53	Issaquah Creek Highlands New Storage	New Storage Facility	2029	$3,900,000
54	Planning, Studies, Administration, and Program Development	Ongoing Program	2030	$15,200,000
Sub-Total of projects through 2030				***$648,000,000***
55	Auburn3 New Storage	New Storage Facility	2030-2050	$33,800,000
56	[CSI] North Creek 3-A	New Gravity Line	2030-2050	$6,700,000
57	Lakeland Trunk	New Gravity Line	2030-2050	$4,800,000
58	ULID 1 Contract 4	New Gravity Line	2030-2050	$2,300,000
59	Issaquah2 Trunk	New Gravity Line	2030-2050	$2,300,000
60	South Renton Interceptor	New Gravity Line	2030-2050	$6,900,000
61	North Creek Trunk	New Gravity Line	2030-2050	$4,000,000
62	Algona Pacific Trunk Stage 2	New Gravity Line	2030-2050	$1,300,000
63	Lakeland Hills Pump Station Upgrade	New Force Main, Pump Station Upgrade	2030-2050	$3,700,000
2nd phase of Project 34	[CSI] Coal Trunk Replacement	New Gravity Line	2030-2050	$7,000,000
2nd phase of Project 30	North Mercer and Enatai Interceptors	New Gravity Line	2030-2050	$12,000,000
2nd phase of Project 36	[CSI] Sammamish Plateau Diversion	New Gravity Line	2030-2050	$4,600,000
2nd phase of Project 40	Heathfield/Sunset Pump Station and Force Main Upgrade	New Force Main, Pump Station Upgrade	2030-2050	$21,900,000
2nd phase of Project 52	[CSI] Sammamish Plateau Storage	New Storage Facility	2030-2050	$7,200,000
2nd phase of Project 51	[CSI] Issaquah New Storage	New Storage Facility	2030-2050	$4,900,000
2nd phase of Project 48	[CSI] North Creek 2-A	Gravity Line	2030-2050	$7,200,000
Sub-Total of 2031–2050 projects				***$130,600,000***
Total project cost estimate				**$778,600,000**

[a] Year online balances capacity needs with estimated funding availability.
[b] All estimated costs are in 2003 dollars.

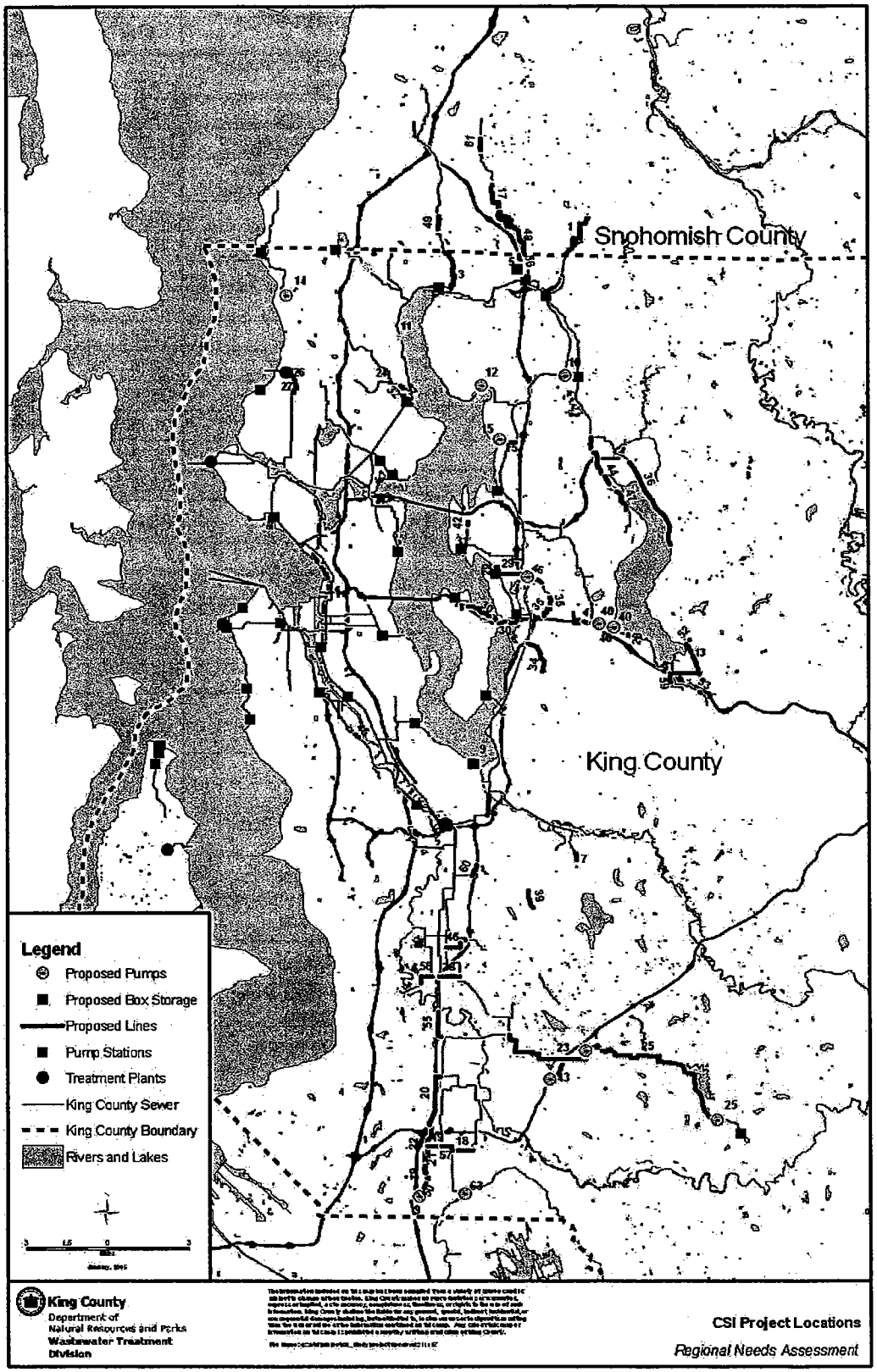

Figure 4-1. Conveyance System Improvement Project Locations

4.2.3 Locations of CSI Projects in Relation to I/I Flows in Mini Basins

During storm events, I/I is by far the largest contributor to wastewater volumes that must be conveyed and treated (see Figure 2-4 in Chapter 2). If I/I flows could be reduced in targeted mini basins, it may be possible to reduce the need for conveyance system improvements because the capacity needed to convey and treat wastewater from these mini basins would also be reduced. Figure 4- shows the location of needed CSI projects in relation to metered I/I levels in mini basins throughout the service area. As can be seen, a number of the CSI projects are near mini basins with relatively high I/I flows.

4.3 Assumptions Used in the Analysis

The County and local agencies developed assumptions based on engineering judgments and lessons learned from the pilot projects. The assumptions were used to estimate the costs and effectiveness of identified CSI projects and I/I reduction projects upstream of the CSI projects.

4.3.1 Planning Assumptions for the I/I Control Program

A number of conditions drive the timing, sizing, and costs of facilities that occur in the future; each require planning level assumptions to arrive at a value. To accurately project CSI needs, King County used assumptions developed for the I/I control program. After completing the I/I pilot projects, local agencies and the County collaborated to further develop these assumptions for use in the flow modeling done for the benefit-cost analysis. Table 4-2 summarizes several of the more significant planning assumptions.[8]

[8] For details about planning assumptions, see Appendix A5 of the *Regional Needs Assessment Report.*

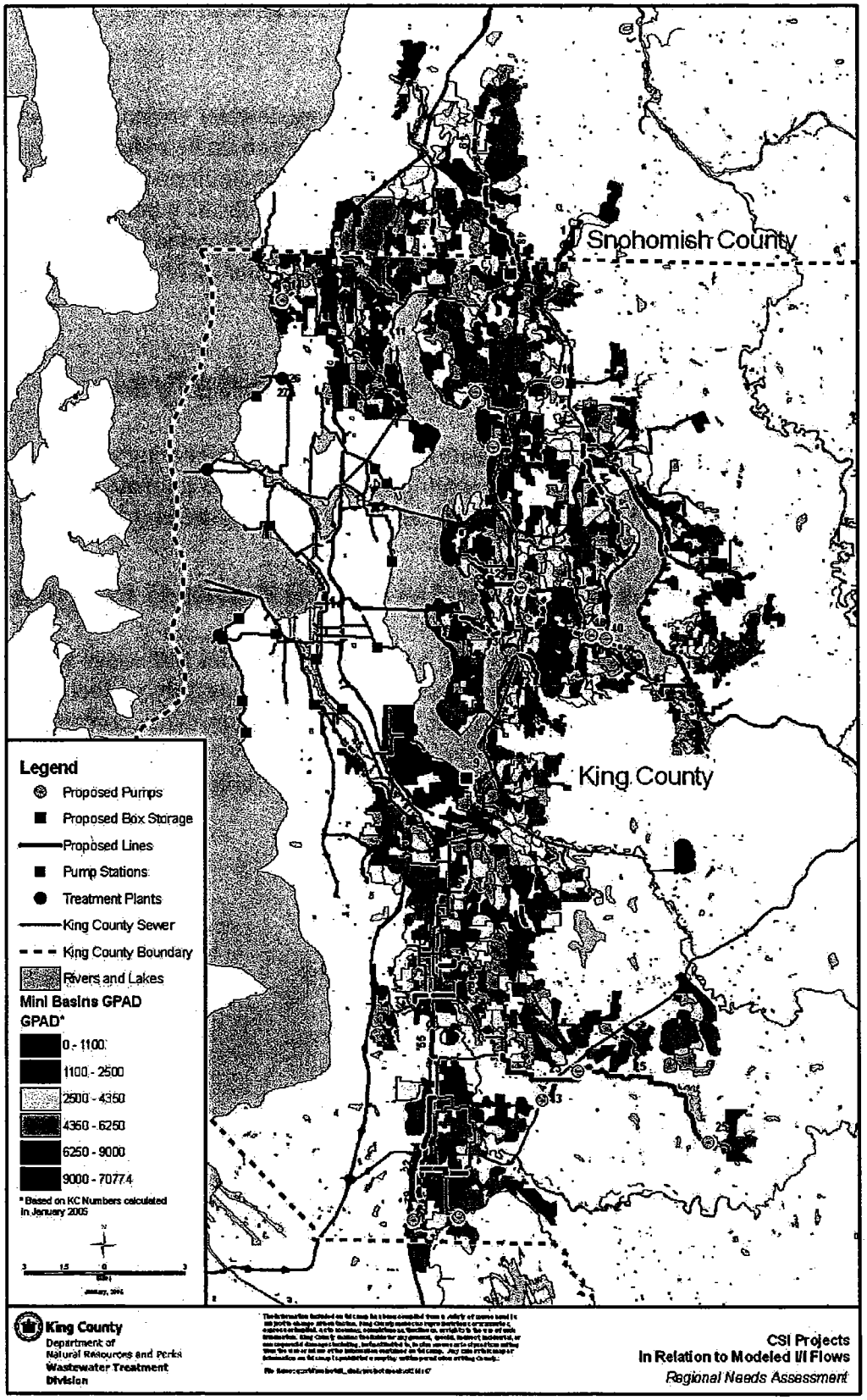

Figure 4-2. Conveyance System Improvement Projects in Relation to I/I Levels

Table 4-2. Planning Assumptions for the I/I Control Program

Item	Assumption
Water conservation (base flow projections)	10% reduction by 2010; no additional reduction thereafter
Septic conversion	90% of unsewered but sewerable area in 2000 sewered by 2030; 100% by 2050
New system I/I allowance	1,500 gallons per acre per day (gpad)
Design flow	20-year peak flow, based on Sea-Tac 60-year rainfall record, adjusted per annual average rainfall over each part of the service area
Degradation	7% per decade starting in 2000 up to 28% for existing pipe; 7% per decade starting after date of construction up to 28% for new construction
Sizing of facilities	Design flow at saturation plus 25% safety factor (when sizing facilities, a safety factor of 25% of additional capacity will be used)
Discount rate	6%
Inflation rate	3%
Operation and maintenance	Update the following from the *Regional Wastewater Services Plan* (RWSP): • New pipes: $0.15 per linear foot annually • New pump stations: $4,104 per million gallons per day (mgd) + $60,384 • New storage facilities: $34,091 per million gallons (MG) + $4,546 • Treatment plants: $15,000–$30,000 per mgd of average annual flow reduction (plant specific); covers energy and disinfection costs

4.3.2 Assumptions for Estimating Capital Costs of CSI Projects

Table 4-3 lists the assumptions used to estimate costs for conveyance facility construction and allied activities (such as project management, engineering, inspection, and mitigation). These costs were generated by TABULA, a planning level software tool developed by King County that extends unit costs, applies construction cost indices, and allows for consistent estimating across Wastewater Treatment Division projects.

Table 4-3. Conveyance Facility Construction and Allied Cost Assumptions

Item	Cost Assumption
Construction	Based on TABULA with factors for traffic, utility conflicts, and groundwater
Utility conflicts	None: $0 Average: $20/linear foot Heavy: $40/linear foot
Traffic control	None: $0 Average: $5/linear foot of main Heavy: $10/linear foot of main
Dewatering	None: $0 Average: $20/linear foot Heavy: $50/linear foot
Sales tax	8.8% of construction estimate
Planning, predesign, design, construction, closeout, and land acquisition contingency	51.4% of construction estimate
Project contingency	30% of construction estimate
Mitigation (environmental, land use, public disruption, private property, and others)	Project-specific

4.3.3 Assumptions for I/I Reduction

In addition to developing planning and capital cost assumptions, the County and local agencies developed assumptions for the amount of I/I reduction that could be expected from types of I/I projects. Table 4-4 lists the I/I reduction technique (system components to be targeted for rehabilitation), the percent of the total basin that would be rehabilitated (based on lessons learned from the pilot projects), and the percent of I/I reduction assumed possible.

These I/I reduction assumptions reflect concerns raised by the local agencies that initial assumptions generated from pilot project experiences may be based on too limited an application. The local agencies did not want to overestimate capital facility and I/I reduction benefits while underestimating I/I reduction project costs. The initial assumptions were adjusted to make them more conservative and to provide greater confidence in the I/I reduction and cost projections derived from the benefit-cost analysis. It was agreed that the initial assumptions would be used to run a sensitivity analysis that would provide the upper end of the range for cost-effectiveness outcomes. Results of the sensitivity analysis are summarized at the end of this chapter.

Table 4-4. I/I Reduction Assumptions

Technique	Description	% Basin Rehabilitated	% I/I Reduction Assumption
1	Direct disconnects	4%	10%
2	Replace everything and direct disconnects	95% Sewer mains 95% Manholes 95% Laterals and side sewers 4% Direct disconnects	80%
3	Replace public sewers and direct disconnects	50% Sewer mains 50% Manholes 50% Laterals 4% Direct disconnects	40%
4	Private property and some laterals and direct disconnects	50% Laterals and side sewers 45% Side sewers only 4% Direct disconnects	60%
	Minimum remaining I/I after rehabilitation	3,500 gallons per acre per day (gpad)	

Notes:

Laterals are the portion of the private sewer pipe that is in public right-of-way; a side sewer is the portion of the private sewer pipe that is on private property.

Direct disconnects are the disconnection of connections to the sewer system, usually located on private property, that allow stormwater to flow into the sanitary sewer. Examples of such connections include roof gutter drains, catch basins, sump pumps, and foundation drains.

A sewer main is a principal sewer to which branch sewers are tributary.

4.3.4 Assumptions for Unit Costs of I/I Reduction Techniques

Unit costs for I/I reduction techniques were developed based on I/I pilot project costs and historical sewer rehabilitation costs available locally and nationally. These costs were reviewed by the E&P Subcommittee, and unit cost assumptions were established as shown in Table 4-5.

Table 4-5. Unit Costs Assumptions for I/I Reduction

Technique	Description	Unit Cost Assumption
1	Direct disconnects	$3,000 each
2	Replace everything and direct disconnects	Sewer mains: $110/linear foot Manholes: $3,600 each Laterals and side sewers: $6,800 each Direct disconnects: $1,000 each
3	Replace public sewers and direct disconnects	Sewer mains: $110/linear foot Manholes: $3,600 each Laterals: $3,900 each Direct disconnects: $1,000 each
4	Private property and some laterals and direct disconnects	Laterals: $3,900 each Side sewers: $3,500 each Laterals and side sewers: $6,800 each Direct disconnects: $3,000 each

Notes:

Laterals are the portion of the private sewer pipe that is in public right-of-way; a side sewer is the portion of the private sewer pipe that is on private property.

Direct disconnects are the disconnection of connections to the sewer system, usually located on private property, that allow stormwater to flow into the sanitary sewer. Examples of such connections include roof gutter drains, catch basins, sump pumps, and foundation drains.

A sewer main is a principal sewer to which branch sewers are tributary.

4.4 Definition of Cost-Effectiveness

To evaluate cost-effectiveness of I/I reduction projects, the following **benefit-cost ratio** was calculated for each candidate CSI project:

$$\frac{\textbf{(CSI Project Savings After I/I Reduction)}}{\textbf{(Cost of Proposed I/I Reduction Project)}}$$

When an I/I reduction project delays, downsizes, or eliminates the need for a conveyance facility improvement, the savings achieved (benefit) must be higher than the cost of the I/I reduction project (cost) to arrive at a positive benefit-cost ratio. Projects with a benefit-cost ratio of greater than 1 were considered as cost-effective for purposes of this analysis.

The following is an example of the application of the benefit-cost ratio to a hypothetical scenario:

Original CSI project cost:	**$30 million**
Cost to do I/I reduction work:	**$10 million (cost)**
Saving to CSI project resulting from I/I reduction (project is downsized):	**$15 million (benefit)**
Benefit-Cost ratio	**1.5**

In this example the benefit is the $15 million saved. This is compared to the cost of the I/I reduction work. The benefit-cost ratio is therefore $15 million/$10 million, which equals a benefit-cost ratio of 1.5.

4.5 Monitoring, Modeling, and Pilot Project Data

In addition to the assumptions described in this chapter, cost and performance data from County and local agency systems and from the 10 I/I reduction pilot projects were used for the benefit-cost analysis. These efforts are summarized here and described in more detail in Chapter 3.

Local agency system data were key inputs to the benefit-cost analysis. Information about the physical configuration of local agency facilities was accessed through the King County geographic information system (GIS). Data showing the physical layout of collection system pipes and existing land use were provided by local agencies and were imported into the County's GIS database. Information about local agency geography, property parcel lines, and the location of future service areas was provided by the County and verified with the local agencies.

The location and intensity of wastewater flows and I/I within the local agency systems provided the basis for estimating the costs of CSI and I/I reduction efforts and also provided necessary information about I/I volumes. To obtain this information, the County conducted a comprehensive flow monitoring study during the winters of 2000–2001 and 2001–2002.[9]

Models were developed to determine the required system capacity before and after implementing proposed I/I reduction projects and to predict the impact of wet-weather conditions on the system. System configuration information, measured flows in local agency systems, and historical rainfall data were input to hydrologic and hydraulic models to represent and quantify how the regional wastewater system behaves with respect to I/I.[10]

[9] For more information about the flow monitoring study, see the *2000/2001 Wet Weather Flow Monitoring Technical Memorandum* and the *2001/2002 Wet Weather Flow Monitoring Technical Memorandum.*
[10] Detailed descriptions of the modeling efforts can be found in both the *Regional Needs Assessment Report* and the *Benefit-Cost Analysis Report.*

Modeled I/I consists of multiple flow components, as shown in Figure 4-. During dry weather, only wastewater and a relatively constant amount of clear water, or infiltration flow, are present in the wastewater system. During wet weather, basins that are impacted by I/I typically exhibit (1) a fast response almost immediately after rainfall begins that may continue throughout the rainfall event and subside quickly at the conclusion of the event and/or (2) a slow response that has less severe peaks and has a relatively longer duration after the rainfall event. Modeled I/I flow components point to likely system sources of I/I. For example, a sudden increase in flow after rainfall tends to indicate direct stormwater connections to the sewer (inflow) or infiltration from shallow side sewers. This modeled information, coupled with information from the pilot projects that demonstrated costs and reduction effectiveness of targeting specific system components for rehabilitation, provided key inputs to the benefit-cost analysis.

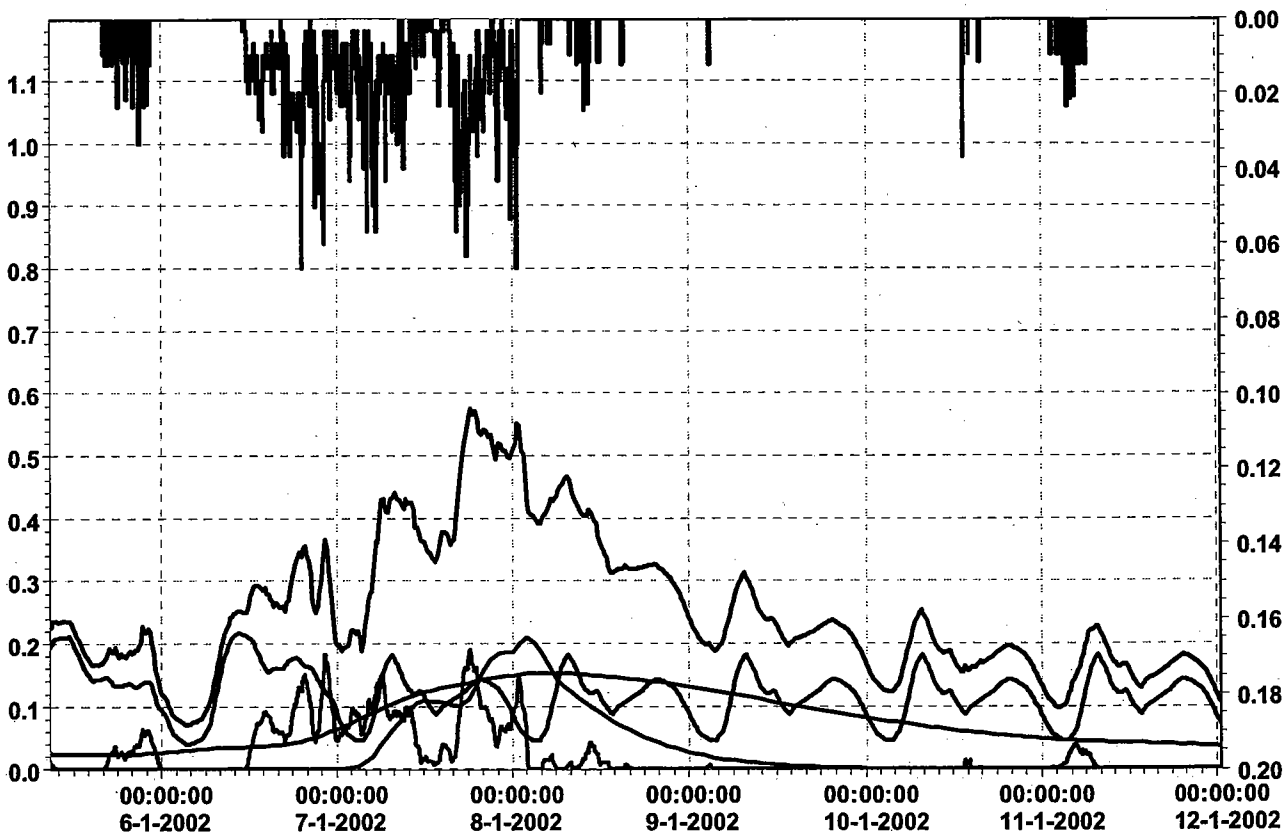

Legend:

Dry Weather Flow	——	Total Simulated I/I Flow	——
Base Infiltration	——	Fast Response Component	——
Measured Rainfall	——	Slow Infiltration	——
Date Format (dd-mm-yyyy)		Rapid Infiltration	——

Figure 4-3. Simulated Flow Components

4.6 Benefit-Cost Analysis Results

B/C Tool synthesized all required data and assumption inputs. The analysis identified nine cost-effective I/I reduction projects (Table 4-6). All of these projects yield a benefit-cost ratio of greater than 1—that is, the savings (benefit) achieved by an I/I reduction project that results in downsizing or eliminating the need for a CSI project is greater than the cost of doing the I/I reduction project (cost).

In response to direction in the RWSP, alternatives for evaluating cost-effectiveness were identified and documented in the *Alternatives/Options Report.* The definition of cost-effectiveness and the nine resulting cost-effective projects are based on the preferred alternative—that cost-effectiveness will be considered on a project-specific basis. Results of the benefit-cost analysis for the other two alternatives are summarized at the end of this section. Consensus-based recommendations regarding all three alternatives are discussed in Chapter 5. All cost and savings estimates are the result of a planning-level analysis done to support decision-making about how to proceed with I/I reduction efforts in the regional wastewater service area and are subject to change as further information is developed for each project.

The three alternatives for evaluating cost-effectiveness are as follows:

- **Project specific basis (preferred alternative).** Each project has to meet the criterion of a benefit-to-cost ratio of greater than 1. The savings from I/I reduction for a particular CSI project would have to exceed the I/I project costs on a stand-alone basis. Savings from projects with a greater than 1 ratio could not be used to fund projects with benefit-cost ratios of less than 1.
- **Region-wide basis.** Savings would accumulate from projects with a benefit-to-cost ratio that is greater than 1. These accumulated savings could then be applied to additional I/I reduction projects with benefit-cost ratios of less than 1; thus, I/I reduction would be cost-effective on average over a region-wide basis.
- **A 30 percent I/I reduction goal.** RWSP Policy I/IP-2.4 states: "The overall goal for peak I/I reduction in the service area should be thirty percent from the peak twenty-year level identified in the (RNA) report." The benefit-cost analysis would therefore need to evaluate the cost that would be expended to reach a goal of 30 percent I/I reduction.

Table 4-6. Cost-Effective I/I Reduction Projects

CSI Project No.	Project	I/I Available (mgd)	I/I Reduction (mgd)	Benefit: Capital CSI Cost Reduction	Cost: I/I Reduction Project	B/C Ratio	No. of Private Properties
60	South Renton Interceptor (RE*SRENTON.R18-16(9))	7.0	0.81	$7,270,000	$2,217,645	3.3	119
58	ULID 1 Contract 4 (RE*ULID 1-4.S-31(8))	5.5	1.08	$2,410,000	$999,123	2.4	101
55	Auburn 3 New Storage (Auburn3 Twin Tube Storage)	52.8	6.87	$22,990,000	$11,362,511	2.0	1,176
59	Issaquah 2 Trunk (RE*ISSAQ2.R17-40(3))[a]	5.4	1.05	$5,770,000	$3,964,850	1.5	395
33	Bryn Mawr Storage (Bryn Mawr Tube Storage)	16.2	2.04	$8,510,000	$6,018,534	1.4	557
47	Lk Hills Trunk 3rd Barrel Upgrade (WE*LKHILLST.ENTR(3))	10.8	2.20	$14,438,000	$11,307,052	1.3	1,086
41	Eastgate Storage and Trunk[b] (Eastgate Tube Storage)[a]	8.7	3.55	$16,629,000	$14,459,862	1.2	1,163
35	Wilburton PS / Factoria Trunk (RE*FACTOR.RO6-05(7))	10.4	2.39	$12,058,000	$10,550,378	1.1	976
46	Garrison Creek Trunk (RE*ULID 1-5.57I(10))	5.7	2.12	$13,660,000	$12,013,489	1.1	1,275
	TOTAL	**122.5**	**22.11**	**$103,735,000**	**$72,893,444**		**6,848**

Note: Identified projects are based on E&P Subcommittee–approved assumptions.

[a] The Eastgate Tube Storage and RE*ISSAQ2.R17-40(3) projects are related and are considered as one project for construction.

[b] Modeling for the Eastgate trunk facilities was updated since the *Regional Needs Assessment Report* was published in March 2005. The updated project now includes the new Eastgate storage facility.

Considering cost-effectiveness on a project-specific basis focuses I/I reduction where downstream conveyance benefits are the greatest. This alternative also achieves the greatest possible savings to the region. Highlights of the nine cost-effective I/I reduction projects resulting from this analysis are as follows:

- The estimated cost of implementing the nine cost-effective I/I reduction projects is approximately $73 million.
- The anticipated I/I reduction achievable is estimated at 22 million gallons per day (mgd), or approximately 18 percent of the I/I present in the affected mini basins and approximately 5 percent of the I/I present in the entire regional service area.
- As a result of reducing I/I flows, the capital costs for associated CSI projects could be reduced from approximately $268 to $164 million, resulting in a regional CSI savings of nearly $104 million.

- The net overall savings realized from implementing the nine identified cost-effective I/I reduction projects is estimated at approximately $31 million.

The benefit-cost analysis for the second alternative—evaluating cost-effectiveness on a regional basis—identified 13 projects, with benefit-cost ratios ranging from a high of 3.3 to a low of 0.48. While several projects on the list were less than cost-effective, the savings from the other projects were spread out to make the average benefit-cost ratio 1.02, essentially a break-even ratio. To pursue this alternative, approximately $132 million would be spent on I/I reduction to achieve a $134 savings (benefit), for a net overall saving of $2 million.

The benefit-cost analysis for the third alternative evaluated the cost of removing 135 mgd of I/I from the regional collection system, which is 30 percent of the region's total estimated 450 mgd of I/I. The total cost to achieve this level of I/I reduction was calculated at approximately $398 million and would result in a savings in capital CSI project costs of $116 million. For this alternative, the benefit ($116 million) to cost ($398 million) ratio for achieving 30 percent I/I reduction would be 0.29, which is below the standard set for cost-effectiveness.

4.7 Sensitivity Analysis Results

At the request of the E&P Subcommittee, the initial assumptions regarding I/I reduction levels were used to complete a sensitivity analysis that would put an upper limit on the potential savings available to the region through I/I reduction. The sensitivity analysis was conducted for comparison purposes only, in order to provide the range of cost-effective projects possible. Recommendations for use of sensitivity analysis results are discussed in Chapter 5 of this report.

The initial assumptions used in the sensitivity analysis are shown in Table 4-7; a comparison of the results of the benefit-cost and the sensitivity analyses is shown in Table 4-8. Using the initial assumptions results in identification of 11 cost-effective I/I reduction projects with a greater total projected net regional savings and level of I/I reduction than the 9 projects identified through the benefit-cost analysis.

Table 4-7. Sensitivity Analysis Using the Initial Assumptions for I/I Reduction

Technique	Description	% Basin Rehabilitated	% I/I Reduction Assumption
1	Direct disconnects	4%	15%
2	Replace everything and direct disconnects	95% Sewer mains 95% Manholes 95% Laterals and side sewers 4% Direct disconnects	80%
3	Replace public sewers and direct disconnects	50% Sewer mains 50% Manholes 50% Laterals 4% Direct disconnects	45%
4	Private property and some laterals and direct disconnects	25% Laterals and side sewers 70% Side sewers only 4% Direct disconnects	75%
	Minimum remaining I/I after rehabilitation	1,500 gallons per acre per day (gpad)	

Notes:

Laterals are the portion of the private sewer pipe that is in public right-of-way; a side sewer is the portion of the private sewer pipe that is on private property.

Direct disconnects are the disconnection of connections to the sewer system, usually located on private property, that allow stormwater to flow into the sanitary sewer. Examples of such connections include roof gutter drains, catch basins, sump pumps, and foundation drains.

A sewer main is a principal sewer to which branch sewers are tributary.

Table 4-8. Comparison of Benefit-Cost and Sensitivity Analyses Results

	Conservative Assumption	Initial Assumption
Total I/I removed	22 mgd	59 mgd
% removed	**5%**	**13%**
Total capital savings	$104,000,000	$216,500,000
Total I/I rehabilitation costs	$73,000,000	$107,000,000
Total net regional savings	**$31,000,000**	**$109,500,000**
CSI projects no longer needed	10	28
CSI projects downsized	18	12

Chapter 5

I/I Control Program Recommendation

The 6-year I/I control study culminates with the *Executive's Recommended Regional I/I Control Program* presented in this chapter. All recommended actions are based on consensus decisions made between King County and local wastewater agencies as represented through MWPAAC and its E&P Subcommittee. [1]

The chapter presents an overview of the recommended actions and then discusses the basis for the decisions that formed the recommendations. Both the overview and the discussions are grouped according to the three necessary components for a successful I/I control program: direct I/I reduction, long-term I/I control, and program administration and policy.

5.1 Overview of Recommendations

This section summarizes the recommended actions to reduce I/I in the regional system, to ensure the long-term viability of the reductions and to prevent future increases in I/I, and to put mechanisms and policies in place to properly manage and administer the regional I/I control program.

Recommendations for I/I Reduction:

- Identify cost-effective I/I reduction projects on a project-specific basis, rather than on a regional basis or by the need to meet specific I/I reduction targets.
- Select two or three initial I/I reduction projects for implementation from the list of nine cost-effective projects presented in Chapter 4 of this report. The County and MWPAAC (through the E&P Subcommittee) would work cooperatively to select these projects.
- In the next 3 to 5 years, construct the selected initial projects to test planning assumptions and to gain more information about costs.
- Proceed with work on private property when a project calls for it. Experiences on initial projects would be documented in terms of public involvement activities, private property participation rates, costs, neighborhood impacts, groundwater effects, and special construction issues that arise.

Recommendation Highlights

King County and the local agencies would select, implement, and evaluate two or three "initial" I/I reduction projects to test the effectiveness of I/I reduction on a larger scale than the pilot projects.

After completion of the initial projects, recommendations would be made to the King County Council regarding long-term I/I reduction and control, including applicable changes to policy or code.

[1] MWPAAC = Metropolitan Water Pollution Abatement Advisory Committee.

- Fund initial projects through King County wastewater revenue that is dedicated to funding conveyance system improvement (CSI) projects in the regional conveyance system. For future I/I reduction projects, options to supplement King County funding may be considered. For example, local agencies could contribute funds to expand the project scope in order to take advantage of construction efficiencies, as was done in some pilot projects, or to move a project into the cost-effective category.
- Conduct pre- and post-project flow monitoring to test the ability of I/I reduction projects to reduce enough flow to delay, downsize, or eliminate the need for CSI projects.
- Reconvene the E&P Subcommittee when initial projects and post-project flow monitoring are completed to evaluate results of projects, adjust planning assumptions if appropriate, and further refine private property protocols or best practices to ensure that successful approaches are carried forward to future work.

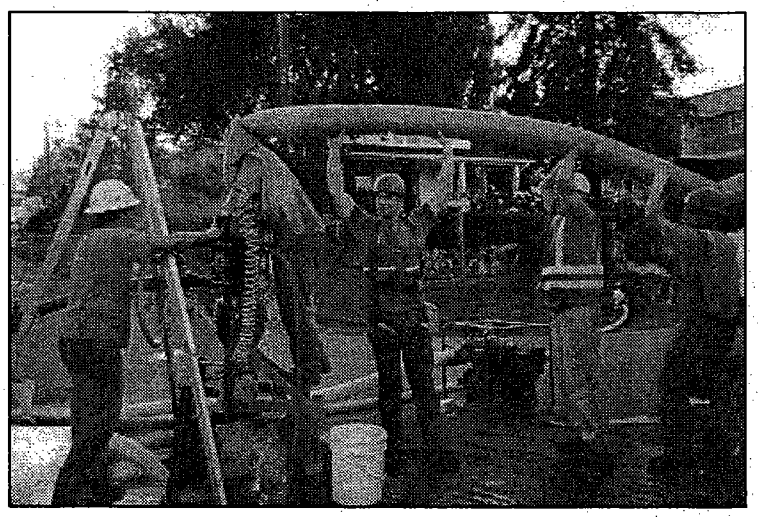

Crew installing cured-in-place-pipe (CIPP) using air inversion method.

- If the initial projects are deemed successful and future I/I reduction is approved, proceed programmatically to apply I/I reduction planning to all CSI project planning. Wherever an I/I reduction project is a cost-effective alternative to the planned CSI project, the County and local agencies would implement the I/I reduction project provided that it is environmentally and logistically feasible.

Recommendations for Long-Term I/I Control:

- Make use of existing local agency regulations to ensure that new development and redevelopment within the regional wastewater service area meet up-to-date construction standards for sewer conveyance lines and connections.
- Apply the standards, guidelines, procedures, and policies in final draft form to the initial I/I reduction projects. Once they have been tested on large-scale projects, the standards, guidelines, procedures, and policies would be reviewed and finalized by the local agencies and translated into King County policy in the form of an ordinance.
- Conduct a system flow audit of the regional and local systems every 10 years to track I/I levels. The County and local agencies would conduct the audits and use the information to cooperatively make decisions about how to adjust I/I control measures as may be necessary.
- Do not implement a surcharge on local agencies for flows that exceed targeted I/I reduction levels already established in the King County Code. The County and local agencies found

that implementing a surcharge, as contemplated in the King County Code, would be costly to administer and would pose difficulties in verifying violations.

Recommendations for Program Administration and Policy:

- Authorize King County to centrally manage the I/I control program, to administer public awareness approaches for the overall program, and to serve as a central clearinghouse for program inquiries and training.
- Conduct flow monitoring to assess effectiveness of I/I reduction over time.
- Wait until after the initial I/I reduction projects are completed before considering any amendments to agreements with local agencies or changes to the King County Code.

5.2 Discussion of I/I Reduction Recommendations

I/I reduction refers to cost-effective sewer system rehabilitation or replacement projects that can be done in a targeted basin to reduce I/I flows and alleviate immediate downstream capacity constraints. A key recommendation for I/I reduction is the implementation, over the next 3 to 5 years, of two or three initial cost-effective I/I reduction projects that can serve as a practical field test of the region's ability to reduce I/I levels at a large enough scale to delay, downsize, or eliminate the need for a more expensive CSI project. This section discusses the recommended processes for selecting, implementing, and evaluating the initial projects. It also gives background on the decision-making processes used to apply planning assumptions, define and evaluate cost-effectiveness, reach funding recommendations, and determine whether to conduct and fund I/I work on private property.

5.2.1 Selecting, Implementing, and Evaluating Initial I/I Reduction Projects

The initial I/I reduction projects would be selected from the list of nine cost-effective I/I reduction projects listed in Chapter 4 of this report. Selection would be done in a consensus-based manner with MWPAAC's E&P Subcommittee. Discussions would focus on prioritizing the projects for a number of factors, including the following:

- Input from local agencies
- Potential risk of overflows or backups (determines relative urgency of projects)
- Ability to time projects to be concurrent with other utility or public projects in the right-of-way (for example, work can be done ahead of planned street resurfacing to save the cost of street restoration for the I/I project)
- Project location and specific basin characteristics that might make certain projects more desirable than others

County staff would identify the prioritization factors for each project and present this information to the E&P Subcommittee for selection of initial I/I reduction projects. The E&P Subcommittee may wish to bring the decision to the full MWPAAC.

The initial projects would be implemented through the Wastewater Treatment Division's normal predesign, design, and construction processes as alternative solutions to the otherwise planned CSI projects. Depending on the projects selected and input from participating local agencies, the County and the participating local agencies may decide to enter into intergovernmental agreements to define who would serve as lead agency and to outline roles and responsibilities for permitting, inspection, public involvement, and other project implementation activities.

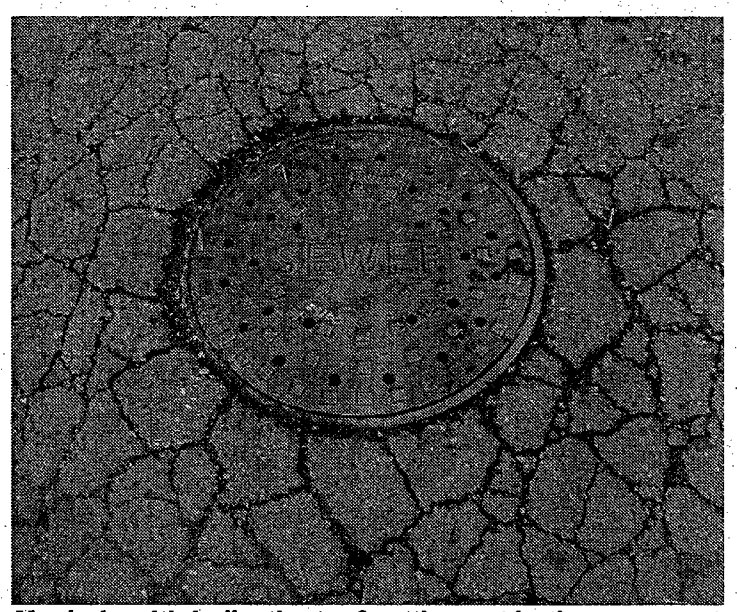

Manhole with indications of settlement in the pavement that likely subject the cover to inundation during rainfall. The large number of pick holes in the lid also allows free flow of surface water into the manhole.

The initial I/I reduction projects would be evaluated after completion to determine (1) whether they were able to reduce I/I levels to a point where enough capacity was relieved to delay, downsize, or eliminate the need for downstream CSI projects, and (2) whether I/I reduction on this scale is cost-effective. Flow monitoring data collected for the I/I control study would be compared with flow monitoring data collected for each project basin after the initial projects are completed. The costs for the initial projects would be compared to the costs for planned CSI projects to determine if the resulting benefit-cost ratio is positive (1 or greater) and is in line with the pre-project planning-level benefit-cost ratio.

Other information would be documented from the initial projects, including issues related to working on private property; execution of roles and responsibilities of the County and local agencies involved in the projects; application of the draft standards, guidelines, procedures, and policies during the projects; and other logistical and construction-related activities.

The results of the post-project evaluations would be discussed with the E&P Subcommittee. The post-project evaluations and results of the discussions with the E&P Subcommittee, including a recommendation regarding whether to proceed with implementing additional I/I reduction projects over time, would be presented to the King County Council.

5.2.2 Applying Planning Assumptions

The planning assumptions for I/I reduction that were used to conduct the benefit-cost analysis are conservative. These conservative assumptions were used to avoid overestimating benefits and underestimating project costs. For purposes of comparison, a sensitivity analysis was conducted using the initial planning assumptions developed from information gained from the I/I pilot projects. As discussed in Chapter 4, the initial planning assumptions result in greater projected benefits—a net savings of $109.5 million for all identified cost-effective I/I reduction projects as opposed to a net savings of $31 million using the more conservative assumptions. After constructing the initial I/I reduction projects and conducting post-reduction flow monitoring, costs and reduction effectiveness can be evaluated to test the accuracy of the planning assumptions. Adjustments can then be made to the assumptions to more closely match the experiences in these larger scale projects. Any adjustments would include input from the MWPAAC and the E&P Subcommittee.

5.2.3 Defining and Evaluating Cost-Effectiveness

To determine whether I/I reduction was cost-effective, a formula for calculating a benefit-cost ratio was developed and applied to individual I/I reduction projects. The formula, as described in Chapter 4, was developed as a means to respond to the RWSP policy that calls for reducing I/I whenever the costs of rehabilitation is less than the costs of conveying and treating that flow. Cost-effective projects are those for which the capital savings that result from I/I reduction exceed the costs of constructing the I/I project. When an I/I reduction project delays, downsizes, or eliminates the need for a conveyance facility improvement, the savings achieved (benefit) must be higher than the cost of the I/I reduction project (cost) to arrive at a positive benefit-cost ratio.

Through discussions with the local agencies, consensus was reached that cost-effectiveness would be considered on an individual project basis in order to maximize cost savings from I/I reduction and to implement only the most cost-effective projects with specific downstream conveyance system benefits. This preferred alternative for evaluating I/I cost-effectiveness was one of three alternatives considered in the *Alternatives/Options Report*. The other two alternatives—reducing I/I by 30 percent in the regional system and evaluating projects on a regional basis—were deemed infeasible after conducting benefit-cost analyses on each alternative.

Cost-Effectiveness Formula

$$\frac{\text{(CSI Project Savings After I/I Reduction)}}{\text{(Cost of Proposed I/I Reduction Project)}} > 1$$

When an I/I reduction project delays, downsizes, or eliminates the need for a conveyance facility improvement, the savings achieved (benefit) must be higher than the cost of the I/I reduction project (cost) to arrive at a positive benefit-cost ratio. Projects with a benefit-cost ratio of greater than 1 are considered as cost-effective.

Local agencies expressed concern early in the development of the program that any reduction goal, such as the 30-percent reduction goal in the RWSP, would be too arbitrary and that trying to meet the goal would lead to overspending on I/I removal without tying I/I reduction to some

measurable collection system and cost saving benefit for the region. To determine the feasibility of the 30-percent reduction goal, a benefit-cost analysis was conducted for removing 135 million gallons per day (mgd) of I/I from the regional collection system, which is 30 percent of the region's total estimated 450 mgd of I/I. The results of the analysis indicated that the benefit ($116 million) to cost ($398 million) ratio for achieving 30 percent I/I reduction would be 0.29, which is considerably below the benefit-cost ratio of greater than 1 that was set for cost-effectiveness.

Analysis of the feasibility of using a third alternative—evaluating the cost-effectiveness of I/I reduction on a region-wide basis—indicated that projects would be implemented at great expense for the sake of I/I reduction alone without necessarily producing any downstream conveyance system benefit. Using this method would essentially result in a break-even situation in which as much is spent on I/I removal as otherwise would have been spent on CSI projects. The benefit-cost analysis for this alternative identified 13 I/I reduction projects with benefit-cost ratios ranging from a high of 3.3 to a low of 0.48. While several projects on the list were not cost-effective, the savings from the other projects were spread out to produce an average benefit-cost ratio of 1.02, essentially a break-even ratio. To pursue this alternative, approximately $132 million (cost) would be spent on I/I reduction to achieve $134 million in savings (benefit).

5.2.4 Funding I/I Reduction Projects

The initial I/I reduction projects would be funded with King County wastewater revenue that is dedicated to funding CSI projects in the regional conveyance system. Spending a smaller amount of money to reduce capacity demands through I/I reduction in lieu of spending money on a more expensive CSI project benefits both the regional wastewater system and ratepayers. King County would also fund future cost-effective I/I reduction projects; alternatives for supplementing this funding would be considered for each project.

Four funding alternatives were considered for the regional I/I control program during development of the *Alternatives/Options Report*. In the early stages of development of these alternatives, the County and local agencies agreed that a project must be considered cost-effective for the region in order to be eligible to receive regional public funds (King County wastewater revenue) and that King County should fund I/I projects that are cost-effective.

The four funding alternatives and the feasibility of their application to future cost-effective I/I projects are as follows:

- **King County funds the entire project.** King County would fund I/I reduction projects that are cost-effective as determined by criteria used in the cost-benefit analysis.
- **King County and the local agencies share costs.** If an I/I reduction project has a benefit-cost ratio less than 1, a local agency may contribute its own funds to the project to make the project cost-effective for the region. A local agency may receive incidental benefits from an I/I reduction project and therefore may choose to contribute funds.

  The local agency's contribution could make the I/I project cost-effective for King County

while at the same time providing the agency with a system upgrade that is partially funded by the County. For example, a $10 million CSI project may have a corresponding $10.5-million I/I reduction project that could eliminate the need for the CSI project. While not cost-effective for the County to pursue, this I/I reduction project could be made cost-effective if the local agency perceived a benefit to its system of $2 million and was therefore willing to contribute this $2 million to the project funding. The local agency's contribution would reduce the County's contribution to $8.5 million, which is below the projected savings that would be achieved by eliminating the need for the $10 million CSI project.

- **Private property owners participate.** Private property owners may participate in and fund rehabilitation projects for work on their property. However, it is unlikely that this option would be used unless a property owner is being required to disconnect an improperly connected downspout, sump pump, or other stormwater/groundwater drainage to the sewer. King County has agreed to fund all cost-effective I/I reduction work, including work on private property. Equity concerns would arise if some I/I work on private property was publicly funded while other work was left to the property owner to fund. (See the discussion later in this chapter on issues related to I/I reduction work on private property.)
- **Related project costs are funded as part of another agency's multipurpose project.** An I/I reduction project that is not cost-effective as a stand-alone project could become cost-effective if other funding sources pay for related project costs (for example, resurfacing the street). This type of situation could occur when another agency's multipurpose project already includes funding for transportation, stormwater, and/or water improvement and an I/I reduction project can coincide with that work to capture efficiencies and cost savings.

  While any I/I reduction project should try to take advantage of concurrent work being done by other utilities in the same right-of-way, it is not recommended that this consideration be given high priority in project selection and planning. It would be rare that projects could take advantage of this type of cost savings because of the complexity of trying to plan projects across multiple jurisdictions or agencies whose funding depends on availability of other financing sources. I/I reduction projects require tightly coordinated planning, budgeting, and construction schedules. A significant scheduling change for an I/I reduction project to accommodate a multipurpose project would require reevaluation of the cost-effectiveness of the I/I project.

5.2.5 Implementing I/I Reduction Projects on Private Property

One major consideration for a regional I/I control program has been how to manage I/I when it originates on private property. Valuable information was gained from the work conducted during the I/I control study about the origins of I/I and about working with private property owners, voluntary participation rates, costs, risks, property restoration issues, and special construction considerations.[2]

[2] Pilot project experiences are discussed in detail in the *Pilot Project Report*.

Flow monitoring, modeling, and pilot projects found that a majority of I/I originates on private property via defective side sewers or improperly connected storm drains, and that significant I/I flow reduction can be achieved in basins where I/I reduction work is conducted on laterals and side sewers.[3] Four of the ten I/I pilot projects focused repairs on private property and achieved the highest levels of I/I reduction. I/I pilot projects that focused repairs only on the public portion of the system achieved measurable I/I reduction but not as much as those that were located predominantly on private property.

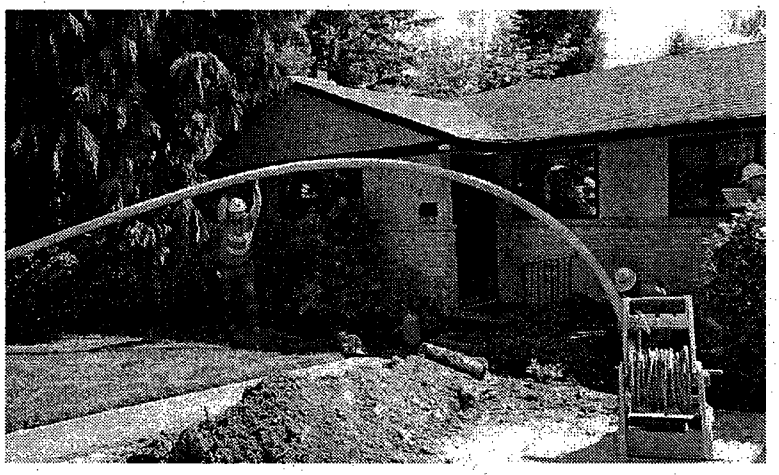

Relining a side sewer on private property.

Given the high costs and disruption of rehabilitating laterals and side sewers, property owners have little incentive to undertake corrective actions on their own. The owners would not directly benefit from the actions unless they were experiencing chronic root intrusion and side-sewer blockage. Moreover, cost estimates for such work must include not only the costs for repairing or replacing sewers but also the costs to restore surface improvements such as yards, landscaping, and pavement. To address these concerns, work on private property that was done as part of the pilot projects was funded by King County with contributions by local agencies. Because there was no cost to the participating property owners, the voluntary participation rate in the pilot projects was 95 percent.

All of the nine cost-effective I/I reduction projects would entail work on private property to achieve the projected I/I reductions. In the benefit-cost analysis, these projects were deemed cost-effective inclusive of the costs and potential risks of private property work. It was therefore recommended that King County and local agencies proceed with work on private property as called for in the scope of work for selected initial projects and that King County fund the work on private property done as a part of these projects. If the initial two or three projects demonstrate the feasibility of working on private property on a larger scale than the pilot projects, repairs on private property can be included as part of the overall I/I reduction strategy in the planning and design of capacity-related CSI projects.

Before finalizing the recommendations that cost-effective I/I reduction work be done on private property and that this work be funded with public funds, it was necessary to address the question of the legality of the use of public funds on private property. This question was explored thoroughly by the King County Prosecuting Attorney's Office (PAO) in 2004 as part of development of the *Alternative/Options Report.*

[3] For a more detailed discussion of how system components are determined to be I/I contributors in a basin, see the *Benefit/Cost Analysis Report.*

The primary concern about the legality of the use of public funds for I/I reduction on private property comes from the Washington State Constitution, Article VIII, Sections 7 and 10. Section 7 prohibits the gift or loan of public funds to private entities.[4] However, Section 10 gives specific authority to the County to loan sewer utility revenues to private property owners to finance I/I repairs provided that an "appropriate charge back" is made. Further reading of Section 10 indicates that this constitutional provision would not preempt a program that directly funds I/I repairs on private property without repayment of funds.

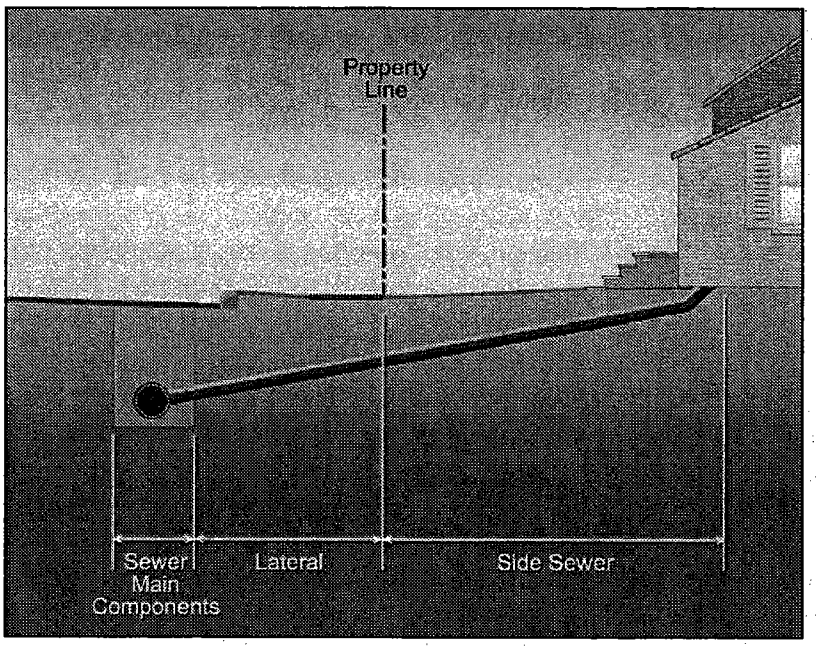

Side sewer: the portion of the sewer pipe that extends from a building to the public right-of-way.

Considering Sections 7 and 10 of Article VIII together, the PAO found that expenditures of public funds on private property for I/I would not constitute an unconstitutional gift of public funds under Article VIII, Section 7, provided that the public benefit is demonstrated and documented to outweigh the cost of other approaches to managing I/I or providing the sewer capacity and that any private benefit is incidental and not intended to be a gift.

These findings are based on the reasoning in the Supreme Court case *City of Tacoma v. Taxpayers of the City of Tacoma*.[5] This was an electrical utility case in which conservation expenditures on private property to achieve cost savings for the electrical utility were held not to be unconstitutional gifts of public funds. The PAO cautioned that although this electrical utility case provides a useful precedent, it is not perfectly analogous to conducting I/I reduction work to provide more capacity in the sewer conveyance system. However, the PAO believed that as long as I/I reduction could be shown to be cost-effective (that it could be shown to have a public benefit that outweighs the cost), the expenditure of public funds for this purpose would be legally defensible and would not be a violation of the Washington State Constitution provisions on the subject.

[4] Appendix A of this report provides references to the legal documents reviewed for the analysis of the use of public funds for I/I reduction work on private property.
[5] *City of Tacoma v. Taxpayers of the City of Tacoma,* 108 Wash. 2d. 679, 743 P.2d 793 (1987). (*City of Tacoma).*

5.3 Discussion of Long-Term I/I Control Recommendations

In addition to cost-effectively removing enough I/I from the collection system to delay, downsize, or eliminate some otherwise needed CSI projects, measures must be in place to maintain I/I levels long-term and to prevent future increases in I/I throughout the regional system. Recommendations for controlling I/I levels in the regional system are of equal importance to recommendations for I/I reduction. If the collection system degrades at an accelerated rate over time, I/I levels will take up more and more of the regional system's capacity to convey wastewater. Long-term I/I control includes policy, administrative, financial, and technical measures that promote an ongoing program of review, maintenance, and repair of the collection and conveyance system.

Anticipating the need for development of long-term I/I control measures, the RWSP gave direction to include or consider components such as regional inspection standards, design standards, and a surcharge to enforce target I/I levels (also referred to as I/I thresholds) that exist in the King County Code. The following are the RWSP policies that relate to long-term I/I control:

> **I/IP-2.2:** By December 31, 2002, the county, in coordination with component agencies, shall develop model local conveyance systems' design standards, including inspection and enforcement standards, for use by component agencies to reduce I/I within their systems.
>
> **I/IP-2.4:** No later than December 31, 2004 (now 2005)[6], utilizing the report described in subsection 3, the executive shall recommend target levels for I/I reduction in local collection systems and propose long-term measures to meet the targets. These measures shall include, but not be limited to, establishing new local conveyance systems design standards, implementing an enforcement program, developing an incentive based cost sharing program and establishing a surcharge program. The overall goal for peak I/I reduction in the service area should be thirty percent from the peak twenty-year level identified in the report.
>
> **I/IP-3:** King County shall consider an I/I surcharge, no later than June 30, 2005 (now 2006), on component agencies that do not meet the adopted target levels for I/I reduction in local collection systems. The I/I surcharge should be specifically designed to ensure the component agencies' compliance with the adopted target levels. King County shall pursue changes to component agency agreements if necessary or implement other strategies in order to levy an I/I surcharge.

In response to these RWSP policies, the *Alternatives/Options Report* identified several options for the long-term I/I control component of the program. Options were presented for addressing pre-1961 pipes in the local and regional collection systems, which were specifically exempted

[6] Because of the need to conduct flow monitoring for two years, the I/I program deliverable schedule was extended by one year for all dates. (See Chapter 3 of this report for more details.)

from threshold and surcharge provisions in some of the service agreements with the local agencies; establishing an I/I threshold; providing financial incentives or disincentives such as variable rates or surcharges; developing standards, guidelines, procedures, and policies; educating and involving the public; and addressing other administrative issues.

The four recommendations for long-term I/I control are as follows:

- Make use of existing local agency regulations to ensure that new development and redevelopment within the regional wastewater service area meet up-to-date construction standards for sewer conveyance lines and connections.
- Apply the standards, guidelines, procedures, and policies in final draft form to the initial I/I reduction projects. Once they have been tested on large-scale projects, the standards, guidelines, procedures, and policies would be reviewed and finalized by the local agencies and translated into King County policy in the form of an ordinance.
- Conduct a system flow audit of the regional and local systems every 10 years to track I/I levels. The County and local agencies would conduct the audits and use the information to cooperatively make decisions about how to adjust I/I control measures as may be necessary.
- Do not implement a surcharge on local agencies for flows that exceed targeted I/I reduction levels already established in the King County Code. The County and local agencies found that implementing a surcharge, as contemplated in the King County Code, would be costly to administer and would pose difficulties in verifying violations.

These recommendations represent the consensus reached by the County and local agencies after numerous meetings throughout the 6-year program development process. Knowledge gained from flow monitoring, modeling, pilot projects, and the benefit-cost analysis has contributed to these recommendations. The following sections describe the processes that were used to arrive at each of the recommendations.

5.3.1 Local Development Regulations for I/I Control

During the development of this I/I control program recommendation, all the local agencies provided information that demonstrated that their development codes include language that applies to both new construction and redevelopment work in their respective jurisdictions. This development code language specifically identifies up-to-date procedures and materials that are to be used for developing sewer pipes and connection points to local agency conveyance pipes. Additionally, the local agencies have established material and construction standards for expansion and upgrade of their collection systems. These local standards provide the regulatory tool necessary to ensure that both the privately and publicly owned portions of the collection system are upgraded and operate efficiently over time.

5.3.2 Standards, Guidelines, Procedures, and Policies

In response to RWSP policy direction, King County presented local agencies with a draft set of design and inspection standards that could be used to reduce and control I/I. The draft standards were based on engineering judgments of best practices. Some of the subjects covered in the standards are as follows:

- Establishing proper construction practices and materials for I/I repair and rehabilitation projects
- Encouraging appropriate inspection and testing prior to acceptance of new or rehabilitated sections of sewer
- Developing inspection and repair standards for new and existing structures on private property
- Encouraging appropriate system maintenance
- Providing appropriate predesign, investigation of I/I conditions, inspection of construction, and enforcement of standards

At an I/I program workshop in 2001, local agencies delegated the review of this document to the E&P Subcommittee, whose membership was expanded for this review process to include representation from several agencies. In a series of 16 review meetings, the County and local agencies worked via consensus to refine the document. During the first round of review, some "standards" were changed to "guidelines" via subcommittee consensus and were kept as such in the final review sessions that took place after the pilot projects.

The draft standards, guidelines, procedures, and policies document that came out of this process was submitted to the King County Council by the deadline specified in RWSP policy. The Council accepted the document as a draft until more information could be learned from pilot projects. The draft document was then applied during the pilot projects in 2003. Lessons learned from the projects were documented and brought before the E&P Subcommittee. The current final draft document has remained the same since the last Subcommittee review in summer 2004.[7]

On October 11, 2005, at the request of the E&P Subcommittee, a workshop was held with local agencies to review the contents of the final draft document and to reach consensus on how it should be presented as part of the I/I program recommendation. Consensus was reached that the document should stay in final draft form and that the standards, guidelines, procedures, and policies should be applied and tested during planning, design, and construction of the two or three selected initial I/I reduction projects. The County and local agencies agreed that the applicability and practicality of the standards, guidelines, procedures, and policies needed to be tested on large-scale I/I reduction projects before they could be finalized. Once they are finalized by the County and local agencies, the standards, guidelines, procedures, and policies would be brought back to the County Council for adoption as policy and the local agency development codes and policies would be updated to include them as necessary.

[7] The final draft of the standards, guidelines, procedures, and policies are included as Appendix B of this report.

5.3.3 Flow Audit of Regional and Local Systems

It is recommended that a flow audit be conducted jointly by the County and local agencies every 10 years beginning in 2010. The purpose of the audits is to track progress in controlling I/I levels over time.

The audits would be similar to the flow monitoring conducted as part of the I/I control study. They would include all 34 local agencies and would encompass the entire regional conveyance and treatment system. The County and local agencies would share all information gathered in the audits and would cooperatively make decisions about how to adjust I/I control measures and make any necessary improvements to local agency or regional systems.

The following types of information would be gathered in system audits:

- Peak flow and base flow volumes in local agency collection systems and the regional conveyance and treatment system
- Precipitation data
- Land use and development information necessary to identify and map expansion of local agency systems and the regional collection and conveyance system
- Other information that the County and local agencies deem as necessary at the time of each audit

5.3.4 Whether to Implement an I/I Surcharge

Existing King County Code 28.84.050K contains detailed provisions for the structure and level of the surcharge to be assessed to flows defined as "excess flow" by a formula described in Chapter 2 of this report. However, these provisions have not yet been enforced and it is recommended, as a part of this I/I program recommendation, that they not be implemented. Calculation and enforcement of thresholds and surcharges have proven to be impractical because the code provisions are complicated, language in agreements with local agencies is not uniform concerning exemptions for pipes built before 1961, and the annual costs to cover equipment and staffing for continuous flow monitoring is prohibitive.

Because excess flow as defined in the code is based on a 30-minute period, the volume measured would be small. The code states that in order for the surcharge to approximate the cost of providing additional capacity, the excess flow will be adjusted as if it were occurring for a 24-hour period. The formula to arrive at this adjustment is cumbersome and would require continuous flow monitoring at every connection point to the regional system so that a daily surcharge could be assessed for the period of time the flow is exceeding the threshold.

Another option for determining threshold exceedance was offered during the I/I control study as a way to reduce flow monitoring costs. In this option, the need for continuous metering would be eliminated and the number of flow meters would be reduced by placing flow meters at the model basin level only and basing peak flows and threshold exceedance levels on modeling

calculations. This option would cost approximately $2 million annually and would have to be adopted uniformly in all local agency agreements. Given the strong concerns that local agencies expressed about the implementation of any type of threshold or surcharge program, achieving uniform adoption of this approach in the agreements is unlikely. Further, if it were adopted, enforcement of threshold exceedance based on modeled flow calculations would be difficult to defend.

Local agencies were concerned that any kind of threshold or surcharge provision would be pointless because the regional program has already agreed to pay for identified cost-effective I/I reduction. The agencies would prefer that regional dollars be spent on I/I reduction only where cost-effective to do so. Additionally, local agencies were concerned about the high cost of monitoring to enforce such provisions and took the position that long-term I/I control measures should be rate neutral. Some local agencies felt that surcharges would represent "unfair double-dipping," because the wastewater rate pays for the capacity required to convey I/I. The agencies also argued that a surcharge would impose a financial burden on them and would reduce the funds that local agencies would otherwise have available for investments in I/I reduction and control in their systems. Finally, local agencies do not want the County to take on a regulatory role that would expend rate dollars on enforcement and monitoring activities. Instead, local agencies would prefer to voluntarily adopt uniform standards and procedures to ensure proper construction, inspection, and maintenance of system components to prevent future increases in I/I.

5.4 Discussion of Program Administration and Policy Recommendations

A third element of the I/I control program involves administrative and policy aspects of program implementation and management. Administrative and policy recommendations mutually agreed on by the County and local agencies are as follows:

- **Program management.** The I/I control program would be centrally managed by the Comprehensive Planning and Technical Resources (CPTR) unit of King County's Wastewater Treatment Division. CPTR would organize and manage follow-through of agreed-on action items and would coordinate and communicate program implementation activities. Program management would also encompass planning, analysis, and integration of I/I control measures and conveyance needs.
- **Public education and involvement.** Administration of public awareness approaches, including public education and involvement, for the overall program would be centrally administered by King County. King County would develop public education materials in cooperation with the local agencies and would produce and provide the materials to the agencies. Local agencies would distribute these materials to their customers. Project-specific responsibilities and protocols would be decided between the County and the participating local agencies. Project-specific public education and involvement decisions may be left to individual intergovernmental agreements, as was the case with the pilot projects. The roles and responsibilities for administration of the public involvement aspects of working on

private property would also be jointly agreed on by the County and the participating local agencies.

- **Flow monitoring and ongoing system assessment.** As part of a long-term I/I control program, ongoing or periodic system flow monitoring would be conducted to assess progress made at reducing I/I levels and maintaining the levels over time. CPTR staff are working to determine the frequency and scale of the flow monitoring effort. The decision would be based in part on the need to coordinate the planning and system monitoring needs of all Wastewater Treatment Division programs. The division uses flow monitoring data to continually update and check the modeling that is used to plan for adequate capacity in the regional collection and treatment system. To assess I/I reduction levels, flow monitors could be placed at the local agency level, model basin level, or mini basin level and data could be collected annually or less frequently. Various levels of data collection with levels of associated cost would be brought to the E&P Subcommittee for open discussion. The ensuing frequency and scale of flow monitoring may change over time and at different periods depending on the needs of the Wastewater Treatment Division.

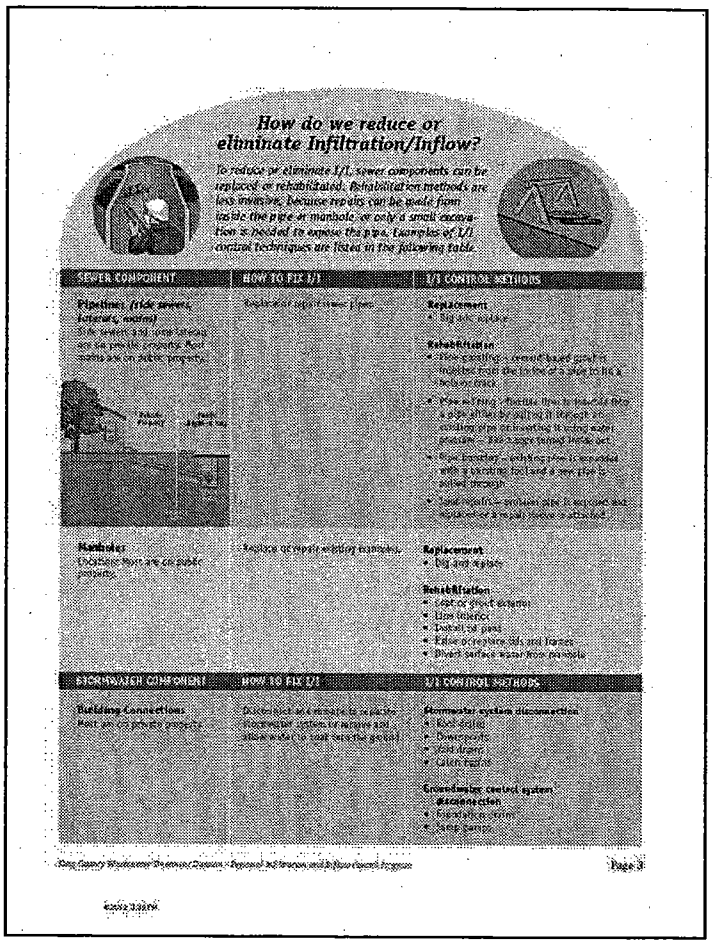

Sample page from public outreach brochure explaining how to reduce or eliminate I/I.

As discussed in the section in this chapter on long-term I/I control, it is recommended that the County in partnership with the local agencies conduct an audit of system-wide flow every 10 years starting in 2010. The audits would include monitoring of regional and local system components, similar to the level of effort expended for the monitoring conducted for the I/I control study. Information gathered would be used for evaluating system needs and updating I/I degradation and cost-effectiveness assumptions.

- **Regional clearinghouse for I/I control information and training.** One of the program policies in the final draft standards, guidelines, procedures, and policies calls for King County to act as a central clearinghouse for responding to inquiries about the regional I/I control program and for King County in conjunction with the local agencies to provide training opportunities on best practices for I/I control and reduction.

- **Amendments to the wastewater disposal agreements and the King County Code.** No amendments to the wastewater disposal agreements with local agencies or to the King County Code are recommended at this time. However, there may be a need to do so after completion of initial I/I reduction projects to reflect the final direction and elements of a long-term I/I control program. Amendments could relate to elements of any of the three major program components discussed in this recommendation: I/I reduction, long-term I/I control, and program administration.

Appendix A

Selected Legal Authorities Related to Implementing and Funding an Infiltration and Inflow Reduction Program

Description:

This appendix contains references to documents used in the legal analysis of the use of public funds to conduct I/I reduction work on private property.

Appendix A

SELECTED LEGAL AUTHORITIES
Related to Implementing and Funding an Infiltration and Inflow Reduction Program

THE WASHINGTON CONSTITUTION

Article VIII STATE, COUNTY AND MUNICIPAL INDEBTEDNESS

SECTION 7 CREDIT NOT TO BE LOANED. No county, city, town or other municipal corporation shall hereafter give any money, or property, or loan its money, or credit to or in aid of any individual, association, company or corporation, except for the necessary support of the poor and infirm, or become directly or indirectly the owner of any stock in or bonds of any association, company or corporation.

SECTION 10 ENERGY, WATER, OR STORMWATER OR SEWER SERVICES CONSERVATION ASSISTANCE. Notwithstanding the provisions of section 7 of this Article, any county, city, town, quasi municipal corporation, municipal corporation, or political subdivision of the state which is engaged in the sale or distribution of water, energy, or stormwater or sewer services may, as authorized by the legislature, use public moneys or credit derived from operating revenues from the sale of water, energy, or stormwater or sewer services to assist the owners of structures or equipment in financing the acquisition and installation of materials and equipment for the conservation or more efficient use of water, energy, or stormwater or sewer services in such structures or equipment. Except as provided in section 7 of this Article, an appropriate charge back shall be made for such extension of public moneys or credit and the same shall be a lien against the structure benefited or a security interest in the equipment benefited. Any financing for energy conservation authorized by this article shall only be used for conservation purposes in existing structures and shall not be used for any purpose which results in a conversion from one energy source to another. **[AMENDMENT 91, 1997** House Joint Resolution No. 4209, p 3065. Approved November 4, 1997.]

WASHINGTON STATE STATUTES

Storm Water and Sewer Utility Conservation Statute. This statute was enacted in 1998 to implement Washington State Constitutional Amendment No. 91 (above) by authorizing a conservation loan program for private homeowners:

RCW 35.67.360
Conservation of storm water and sewer services -Use of public moneys.
Any city, code city, town, county, special purpose district, municipal corporation, or quasi-municipal corporation that is engaged in the sale or distribution of storm water or sewer services may use public moneys or credit derived from operating revenues from the sale of storm water or sewer services to assist the owners of structures or equipment in financing the acquisition and installation of materials and equipment, for compensation or otherwise, for the conservation or more efficient use of storm water or sewer services in such structures or equipment. Except for the necessary support of the poor and infirm, an appropriate charge-back shall be made for the extension of public moneys or credit. The charge-back shall be a lien against the structure benefited or a security interest in the equipment benefited. [1998 c 31 § 2.]

Metro Statute
RCW 35.58.200. Powers relative to water pollution abatement.

If a metropolitan municipal corporation shall be authorized to perform the function of metropolitan water pollution abatement, it shall have the following powers in addition to the general powers granted by this chapter:

(1) To prepare a comprehensive water pollution abatement plan including provisions for waterborne pollutant removal, water quality improvement, sewage disposal, and storm water drainage for the metropolitan area.

(2) To acquire by purchase, condemnation, gift, or grant and to lease, construct, add to, improve, replace, repair, maintain, operate and regulate the use of metropolitan facilities for water pollution abatement, including but not limited to, removal of waterborne pollutants, water quality improvement, sewage disposal and storm water drainage within or without the metropolitan area, including but not limited to trunk, interceptor and outfall sewers, whether used to carry sanitary waste, storm water, or combined storm and sanitary sewage, lift and pumping stations, pipelines, drains, sewage treatment plants, flow control structures together with all lands, property rights,, equipment and accessories necessary for such facilities. Sewer facilities which are owned by a county, city, or special district may be acquired or used by the metropolitan municipal corporation only with the consent of the legislative body of the county, city, or special districts owning such facilities. Counties, cities, and special districts are hereby authorized to convey or lease such facilities to metropolitan municipal corporations or to contract for their joint use on such terms as may be fixed by agreement between the legislative body of such county, city, or special district and the metropolitan council, without submitting the matter to the voters of such county, city, or district.

(3) To require counties, cities, special districts and other political subdivisions to discharge sewage collected by such entities from any portion of the metropolitan area which can drain by gravity flow into such metropolitan facilities as may be provided to serve such areas when the metropolitan council shall declare by resolution that the health, safety, or welfare of the people within the metropolitan area requires such action.

(4) To fix rates and charges for the use of metropolitan water pollution abatement facilities, .and to expend the moneys so collected for authorized water pollution abatement activities.

(5) To establish minimum standards for the construction of local water pollution abatement facilities and to approve plans for construction of such facilities by component counties or cities or by special districts, which are connected to the facilities of the metropolitan municipal corporation. No such county, city, or special district shall construct such facilities without first securing such approval.

(6) To acquire by purchase, condemnation, gift, *or* grant, to lease, construct, add to, improve, replace, repair, maintain, operate and regulate the use of facilities for the local collection of sewage or storm water in portions of the metropolitan area not contained within any city or special district operating local public sewer facilities and, with the consent of the legislative body of any such city or special district, to exercise such powers within such city or special district and for such purpose to have all the powers conferred by law upon such city or special district with respect to such local collection facilities: PROVIDED, That such consent shall not be required if the department of ecology certifies that a water pollution problem exists within any such city or special district and notifies the city or special district to correct such problem and corrective construction of necessary local collection facilities shall not have been commenced within one year after notification. All costs of such local collection facilities shall be paid for by the area served thereby.

(7) To participate fully in federal and state programs under the federal water pollution control act (86 Stat. 816 et seq., 33 U.S.C. 1251 et seq.) and to take all actions necessary to secure to itself or its component agencies the benefits of that act and to meet the requirements of that act, including but not limited to the following:

(a) authority to develop and implement such plans as may be appropriate or necessary under the act.

(b) authority to require by appropriate regulations that its component agencies comply with all effluent treatment and limitation requirements, standards of performance requirements, pretreatment requirements, a user charge and industrial cost recovery system conforming to federal regulation, and all conditions of national permit discharge elimination system permits issued to the metropolitan municipal corporation or its component agencies. Adoption of such regulations and compliance therewith shall not constitute a breach of any sewage disposal contract between a metropolitan municipal corporation and its component agencies nor a defense to an action for the performance of all terms and conditions of such contracts not inconsistent with such regulations and such contracts, as modified by such regulations, shall be in all respects valid and enforceable. [1975 c 36 § 1; 1974 ex.s. c 70 § 6; 1971 ex.s. c 303 § 7; 1965 c 7 § 35.58.200. Prior: 1957 c 213 § 20.]

JUDICIAL AUTHORITY

The City of Tacoma v. The Taxpayers of/he City of Tacoma, 108 Wash.2d 679, 743 P.2d 793 (1987). This case was a declaratory judgment action to determine the validity of a City of Tacoma electrical conservation program. The City of Tacoma enacted an ordinance authorizing Tacoma City Light to issue electric revenue bonds and use other public funds to pay for electrical conservation measures in commercial and residential structures. The ordinance was challenged as 1) going beyond the authority granted by RCW 35.92.050, the municipal utility enabling statute, and 2) authorizing an unconstitutional gift of public funds. The Supreme Court upheld the City's program on both counts, ruling that: 1) Tacoma's ordinance was validly enacted under RCW 35.92.050 because Tacoma's conservation program was the functional equivalent of purchasing electricity, and 2) Tacoma's payment for the installation of conservation equipment in private commercial and residential buildings was not an unconstitutional gift or loan of public funds under Art. 8, §7 of the Washington Constitution.

Appendix B

Final Draft Standards, Guidelines, Procedures, and Policies

Description:

This appendix contains the set of draft design standards, guidelines, procedures, and policies developed jointly by the County and local agencies for use in long-term I/I control.

Attachment A to this appendix are the *Final Issues and Findings for Standards, Procedures and Policies for I/I Reduction Projects*, based on the Local Agency Workshop #10, held Tuesday, October 11, 2005.

MWPAAC Engineering & Planning Subcommittee

FINAL DRAFT

Regional I/I Control Standards, Procedures, Policies and Intergovernmental Agreement (IGA)

October 19, 2004

MWPAAC Engineering & Planning Subcommittee

FINAL DRAFT

Table of Contents & Introduction

MWPAAC Engineering & Planning Subcommittee
Regional I/I Control Standards, Procedures, Policies and Intergovernmental Agreement (IGA)

Table of Contents

Beginning on Page:

REGIONAL INFILTRATION/INFLOW CONTROL
STANDARDS, GUIDELINES, PROCEDURES & POLICIES

INTRODUCTION

Background

In 1999, the King County Council approved the Regional Wastewater Services Plan (RWSP). This is a region-wide plan, supported by Local Agencies that established several key components, including: constructing new wastewater treatment facilities, completing collection system improvements, addressing combined sewer systems, considering water reuse, and addressing **infiltration and inflow (I/I).** Specifically, the RWSP ordinance guided the County to work *cooperatively with component agencies to reduce the amount of I/I that flows into component agencies' local collection systems, thereby reducing the impact of I/I on the regional system's capacity.*

Addressing and reducing I/I effectively and efficiently is a complex task. I/I originates from a variety of sources including storm flow into manholes and pipes, groundwater that enters pipes through cracks, root intrusions and from private property. With few exceptions, property owners are prohibited from allowing groundwater and/or rainwater from entering the public sanitary sewer system. Direct connections of a property's roof and/or foundation drains to the public sewer system are called *illicit connections.* These do exist and they are known to cause problems. These problems can range from surcharged sewer lines, backflow of sewerage onto private properties, environmental and public health concerns and increased costs to convey and treat peak flows of sewage plus storm water.

The amount of infiltration and inflow depends on the condition of the all the elements that constitute the sanitary sewer system. Elements such as the number of illicit connections, the physical condition of main lines and privately owned side sewers, the level of groundwater and the porosity of the soil affect the amount of I/I.

Reduction and control of I/I entering the public sanitary sewer system can be managed by proper design, appropriate choice of material, proper installation of sewer infrastructure (including connections and manholes), careful supervision during construction and consistent preventative maintenance.

Historic data from several sources around the country and from King County indicate that under peak wastewater flow conditions, as much as 75% of the area's wastewater flow is generated from I/I. As depicted below, recent surveys[1] indicate that 50% to 70% of I/I comes from private property sources.

[1] King County Infiltration & Inflow National Survey + Pages 11-13, Control of Infiltration and Inflow in Private Building Sewer Connection, Dillard, Wayne, Chair, the Sanitary Sewer Overflow Cooperative Agreement Workgroup of the Water Environment Federation, 1999.

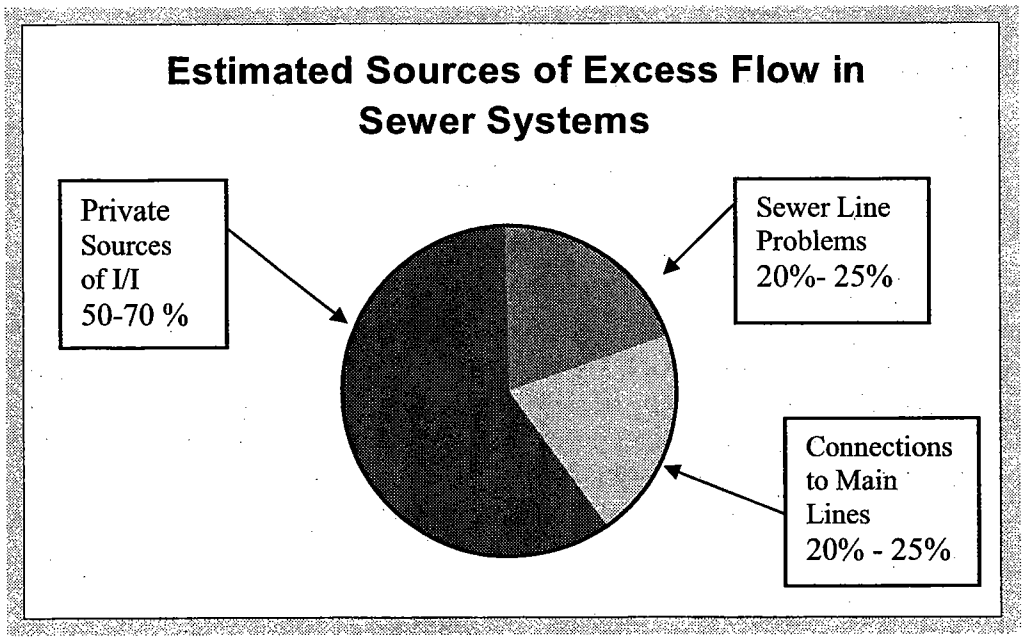

An I/I problem eventually comes to the attention of the general public because of one or more of these conditions: sewer overflows, private sewer facility backups, equipment failures, permit violations, higher operating costs, public facility expansions and/or higher utility rates. Significant problems with I/I often occur in older areas where sewer systems were built using old standards and procedures or have deteriorated. Newer sewer systems also experience problems with excessive I/I because of faulty connections, improper pipe bedding or various construction deficiencies.
As stated, the RWSP gave direction to investigate, quantify, and devise a plan to address I/I concerns. From this an I/I Control Program was begun in 2000 that included technical, financial, and policy considerations.

Purpose

Thirty-four politically and administratively independent Local Agencies discharge wastewater from their systems to King County's regional wastewater system. Wastewater flows within this vast service area have increased to the point that, in some cases, system capacity has been exceeded.
As part of I/I reduction efforts, the RWSP directed the County, in coordination with component agencies, to *develop model local conveyance systems' design standards, including inspection and enforcement standards, for use by component agencies to reduce I/I within their systems.* To meet target levels of I/I in the future, the RWSP also directed the County Executive to propose long-term measures that *include establishing new local conveyance systems design standards, implementing an enforcement program, developing an incentive based cost sharing program and establishing a surcharge program.*

This document contains proposals for Engineering Standards/Procedures, Guidelines and Standard Design Details designed to provide technical and policy tools to begin correcting the shortcomings in design, construction, inspection and testing of sanitary sewers – elements that can be responsible for infiltration and inflow. These Standards and Guidelines address only the features of the public and private sewer system associated with I/I. The document also contains proposed Policies that support these Standards and proposed Intergovernmental Agreement (IGA) clauses specifically tailored to the management of I/I reduction projects in this region. The final draft Standards, Procedures and Policies presented here are intended to augment and emphasize existing standards/procedures/policies previously developed by King County and Local Agencies. They will

be included in the Regional I/I Control Program Alternatives/Options Report and ultimately as part of the Executive's Plan.

Collaborative Approach

A series of workshops attended by representatives of King County, Local Agencies and the consultant team have been held to review and formulate each part of the Regional I/I Control Program. It was agreed at I/I Control Program Workshop #6 that the process of developing I/I Control Program standards and contract language would be a consensus-based, iterative dialogue between King County and the Local Agencies. In mid 2001, with input from King County and Local Agencies, the Earth Tech consultant team began the process by drafting alternative standards, procedures, policies and intergovernmental agreement (IGA) clauses. In the fall of 2001, Local Agencies provided input on preliminary concepts presented therein. At Workshop #7, in January 2002, it was agreed that a subcommittee of the Municipal Water Pollution Abatement Advisory Committee (MWPAAC) be formed to guide development of the Standards, Procedures and Policies.

This MWPAAC RWSP Subcommittee, now known as the Engineering and Planning Subcommittee (E&P), met twice a month during the spring and summer of 2002, and their draft recommendations were published in October 2002. These draft Standards, Procedures and Policies were then used in pilot projects conducted in accordance with the RWSP statement: *This cooperative process will assess levels of I/I in local conveyance systems and construct pilot projects to demonstrate the cost-effectiveness and environmental costs and benefits of local collection system rehabilitation.* The pilot projects also facilitated testing of various technologies for I/I control. The Local Agencies had selected the ten basins, based on consensus criteria, in which the County conducted the pilot projects.

After the pilot projects had been completed, the Earth Tech consultant team evaluated the lessons learned and drafted revised Standards, Procedures, and Policies, which the E&P Subcommittee reviewed and finalized during two meetings in 2004 (see Appendices A & B). In this Final Draft Regional I/I Control Standards, Procedures, and Policies document, the E&P Subcommittee recommends that the proposed Standards, Guidelines, Procedures, Policies and IGA be used during the design and construction of I/I reduction projects.

Document Contents

The second chapter of this document explains the purpose of the Standards and Procedures and presents each Standard and Procedure with information about its potential impacts. The Standards and Procedures focus on methods of design, construction, inspection and testing for use in new construction and rehabilitation projects. Included in the second chapter is an introduction to the engineering Guide Specifications, which are included in full in Appendix C.

The third chapter explains the purpose of the Policies that support the Standards and Procedures and presents each Policy with information about its potential impacts. The Policies provide guidance on issues, including funding, public education, access to private property, inspection, liability and storm water, that are associated with the application of the Standards and Procedures.

The fourth chapter explains the purpose of the IGA and presents a model IGA that can be adapted to a variety of I/I control situations.

This document has been reviewed by Local Agencies, MWPAAC members and King County I/I Control Program staff. It is provided as a final draft document for inclusion as part of the Alternatives/Options report and for further consideration in the Executive I/I Reduction and Control Plan.

Overview of How Standards, Procedures and Policies Fit into I/I Reduction Projects

The chart on the next page illustrates the role played by each individual Standard, Procedure, and Policy element in identifying an I/I problem and its cause, developing a detailed design and scope of work, construction, contracting, warranty, inspection/verification, and long term evaluation.

How Standards, Policies & IGA Elements Fit into an I/I Reduction Project

PLAN

ESTABLISH THAT THERE IS AN I/I PROBLEM

- Standards:
  - PS 1 Storm drainage connections to the sanitary sewer
  - PS 2 Design Capacity for Pipeline Rehabilitation Projects
  - PRV 2 Allowable connections to Side Sewers (new construction)
- Guidelines:
  - PS 3-7 Sanitary Sewer System Evaluation Program
- Policy 2 King County to provide educational material re Regional Program

IDENTIFY CAUSE OF PROBLEM

- Standard:
  - PS 2 Design Capacity for Pipeline Rehabilitation Projects: Failures (Visual, Other)
- Guidelines:
  - PS 3–6 Sanitary Sewer System Evaluation Program
  - PS 7 Modeling & Engineering Analysis

DEVELOP PRELIMINARY SCOPE OF WORK and PRIORITIZATION

- Policy 1 Public Funding Available for All Elements of I/I Control
- Criteria to prioritize in Capital Facilities Plan or I/I Control Plan (Benefit/Cost or Pricing Incentive, GMA Regulations, Comp Plans)
- Standard Process for Scoping
- Policy 3 Specific Project Community Education & Involvement
- Policy 6 Rehabilitation Planning & Oversight – Liability

DESIGN

DETAILED DESIGN & SCOPE OF WORK

- Standards:
  - PUB 1, 3-6, Manhole Specifications
  - PUB 7, Sewer System Design
  - PUB 8, Abandonment Requirements
  - PUB 10-14 Manhole Rehabilitation & Spot Repairs
  - PRV 7, 8 Spot Repairs & Root Intrusion
- Guidelines:
  - PUB 9, Pipe Rehabilitation Methods
  - PRV 1, 3, 4 Pipe bedding & pipe materials
  - PRV 6 Lateral/Side Sewer Rehabilitation

Policy 8-10 On-site Storm Drainage Management

Policy 4 Obtain legal access to private property

Policy 11 Establish property restoration agreement

Policies 12 Establish minimum qualifications for contractors in bid specification

Policy 13 Obtain all permits

Intergovernmental Agreement (IGA) Conditions

CONSTRUCT

CONSTRUCTION

- Standards:
  - PRV 5 Inspection Wyes/Cleanouts
  - Policy 3 Respond to individual's concern

WARRANTY & VERIFICATION

- Standards:
  - PUB 15-19 Leak Testing, Pipe Installation & Inspection
  - PRV 9-14 Leak Testing, Inspection & Certification Requirements
  - PRV 12 Product Specific Inspection
  - PRV 13 Product Specific Certification
- Guidelines:
  - PUB 20 Certification, Warranty & Qualifications
  - PRV 10 Sanitary Side Sewer Inspection
- Policy 4 Enforce codes
- Policy 7 Ensure privately funded & public systems continue to function after rehabilitation. Post Rehabilitation – Warranty, Bonding & Retainage

LONG TERM EVALUATION

Policy 15: Revisions of Standards & Guidelines

PS = Planning
PUB = Public
PRV = Private

MWPAAC Engineering & Planning Subcommittee

FINAL DRAFT

Design and Engineering Standards

REGIONAL I/I CONTROL PROGRAM

STANDARDS, PROCEDURES & POLICIES FOR I/I REDUCTION PROJECTS
FINAL DRAFT INTRODUCTION TO ENGINEERING STANDARDS

Purpose and Background

Based upon discussions with King County staff, the Local Agencies and regional I/I programs across the nation, it has been determined that factors contributing to I/I in the local and regional wastewater systems include improper construction practices and materials; lack of adequate inspection and testing prior to acceptance of a new and rehabilitated sections of sewer; improper system maintenance; and inadequate enforcement of existing ordinances.

This section presents standards, guidelines and procedures for future King County and Local Agency sewer system planning and design that have been developed to focus on correcting shortcomings in design, construction, inspection and testing that have been responsible for I/I. The standards, guidelines and procedures address only those features of sewer systems associated with I/I. They are intended to augment and emphasize standards published by the individual Local Agencies that outline design requirements for overall sewer system design, construction and rehabilitation.

Contributing I/I Factors

Infiltration and inflow are extraneous flows in separated sanitary sewer systems. Infiltration is groundwater that enters buried sewers and service connections by way of defective sewer main elements such as leaky connections of pipes to manholes, broken or separated pipe joints, root intrusion, cracked or crushed pipe, leaky rehabilitation improvements and leaking sewer lines that are abandoned but still connected to the system *(see diagram):*

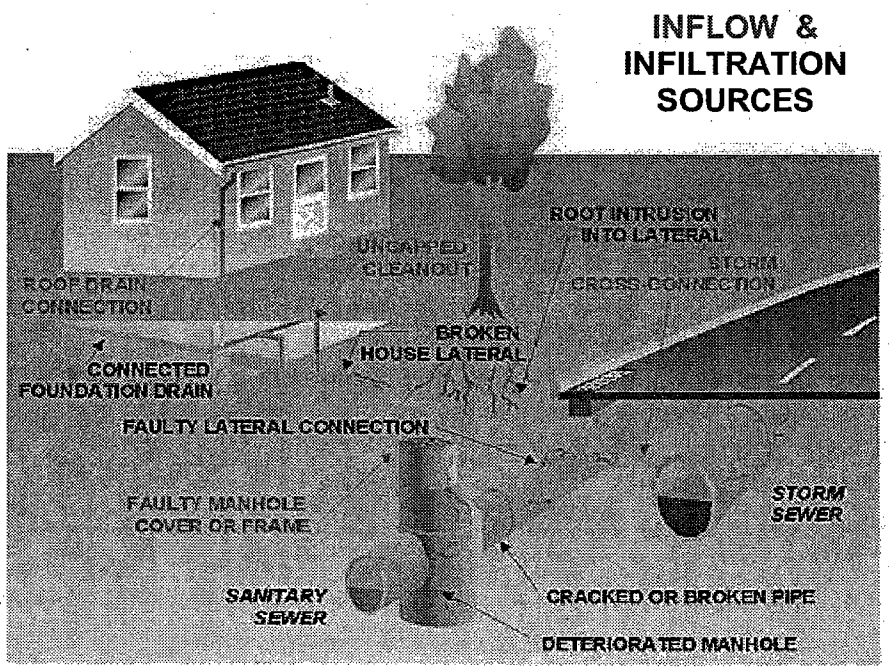

Inflow is surface water that enters the sanitary sewer system by direct connections from roof drains, area drains, catch-basins and unimproved surface drainage. Groundwater sources connected to the system including footing drains and sump pumps, and surface water entering the system through manhole covers are also sources of inflow *(see diagram).*

The following are key factors contributing to impairment of sewer systems' structural abilities, resulting in infiltration and/or inflow:

- Sewer mains, laterals and side sewers that are not properly supported are subject to vertical displacements over time, causing joints to open and pipeline trenches to settle, producing cracks or breaks in sections of the pipe.
- Manholes constructed in wet ground become recipients of groundwater if the exterior walls are not adequately sealed to make joints and connections watertight.
- Structural failure of sewer pipes allows groundwater to enter the system at the point of connection to manholes. Deep cuts and poor ground conditions often result in a larger than necessary excavation, leading to unequal settlement if uniform support is not provided for the pipe and manhole. Inadequate support often causes failure of the pipe in shear at the manhole and provides a point of entry for groundwater.
- Materials must be appropriate for the ground conditions present. Pipeline failures often occur due to the misuse of materials.
- Wyes and tees not properly plugged with a manufacturer's watertight plug, snugly fit and firmly secured, until services are installed and connected can be a source of I/I. Improperly connected service lines, unplugged wyes and tees, and broken plugs allow groundwater infiltration.
- Root systems of plants and trees seeking underground water supplies for nourishment will grow into a sewer through deteriorated and non-gasketed joints or other openings. Groundwater will follow the path of the roots into the sewer. Root intrusion also impedes the normal flow in the pipe, and can eventually stop the flow entirely.
- Manholes that are subject to inundation or located in the path of surface water flow can contribute significant quantities of runoff to the sanitary sewer system.

Recognizing past situations that have allowed extraneous flows to enter the system and establishing standards to prevent these deficiencies on future projects can greatly reduce future I/I. Equally important is ensuring that the standards are followed during construction. Even when adequate standards are in place and used for sewer system design, a lack of inspection and testing during construction allows deficiencies in the system that let extraneous flows enter the system. The standards, guidelines and procedures in this section address testing and inspection requirements for sewer system construction as well as requirements for sewer system planning and design.

Development of Standards, Guidelines and Procedures

The process of developing the Standards, Guidelines and Procedures was a collaborative effort among King County, the Local Agencies and the Earth Tech Consultant Team that spanned several years, as described in the Introduction to this report.

The E&P Subcommittee developed the initial draft standards and policies while considering cost, experience and feasibility factors. In discussing the level of control that should be included in the standards, the group determined that the approach to requiring new and/or different engineering techniques, procedures and policies would be most successful if introduced to the Region's Local Agencies in relatively small, incremental steps. The Subcommittee made this decision based upon financial and political realities. For this reason, the group often opted for the specific alternative of each Standard that required the least risk or financial impact. The group agreed that some alternatives should be considered voluntary Guidelines instead of mandatory Standards. A working draft set of Standards, Guidelines, Procedures and Policies,

dated October 21, 2002 resulted from this effort. A summary of the original and rewritten standards is included in Appendix A.

The E&P Subcommittee decided to apply the working draft Standards, Guidelines, Procedures and Policies to the pilot projects, in order to test their effectiveness and the impacts on staff time and the Local Agency's resources. Following completion of the pilot project construction, the Standards, Procedures and Policies were revisited by the Earth Tech Team to review their effectiveness, incorporate the lessons learned during the project design and construction, and make recommendations for any proposed changes to the documents. The proposed changes were presented and reviewed with the E&P Subcommittee, and a final draft set of Regional I/I Control Standards and Procedures was established. A summary of the proposed changes to the working draft and the Subcommittee's recommendations and accepted changes is included in Appendix A. The Final Draft Standards and Procedures appear below.

Organization of Standards and Guidelines

The standards and guidelines are divided into the following three major categories:

- Planning Standards and Guidelines (PS)– The planning standards and guidelines provide criteria to be followed during the planning phase of sewer projects and I/I investigations.
- Public Facilities (PUB)– The public facility standards and guidelines provide requirements for sanitary sewer systems that will be owned, operated and maintained by King County or a Local Agency. These systems include sewers to be constructed within public rights-of-way and developer extensions constructed within easements that eventually will be transferred to a Local Agency. Categories here include design and construction standards, testing standards, inspection standards and warranty requirements.
- Private Facilities (PRV)– The public facility standards and guidelines provide requirements for privately owned sanitary sewers. It addresses the segments of sanitary side sewers and laterals belonging to the property owners being served. Categories here include design and construction standards, testing standards, inspection standards and warranty requirements.

Separate standards and procedures are provided for new construction and rehabilitation projects. New construction includes the addition of sanitary sewer infrastructure in areas that do not currently have sewer service, as well as the replacement of existing systems. Rehabilitation projects include improvements to existing sanitary sewer systems, including collection mains, manholes and side sewers. Rehabilitation techniques such as cured-in-place liners, pipe bursting, slip-lining and manhole liners fall into this category.

Outline of Individual Standards and Procedures

Each standard or procedure in this document is listed on a separate sheet. While some standards originally offered several alternatives to provide a variety of levels of I/I control with considerations for impact to the Local Agencies, the E&P Subcommittee has narrowed these alternatives to one recommendation per standard, shown in this section. Each standard consists of the following:

- ***I/I Control Standard Title*** – A brief name of the Standard.
- ***I/I Control Measure Description*** – A description of why the Standard is being proposed; essentially what I/I source is being targeted.

- ***Standard/Guideline*** – This describes the Standard/Guideline in sufficient detail for engineers and Local Agency representatives to compare the intent with existing standards.
- ***Potential Local Agency Impacts*** – This indicates the potential impacts on Local Agencies adopting the standard. Impacts may include additional staffing requirements and impacts on Local Agency procedures such as record keeping, inspections, maintenance, equipment, and other elements of daily operations. Elements of the Standards that could bring added or reduced cost to the normal processes of an Local Agency are listed. Due to the variability between Local Agencies, no specific dollar amounts are presented.
- ***Potential King County Impacts*** – This indicates the potential impacts on King County of adopting the Standard. Impacts may include additional staffing requirements and impacts on County procedures, record keeping, inspections, maintenance, equipment, and other elements of daily operations by Department of Natural Resources staff. Elements of the Standards that could bring added or reduced cost to the normal County processes are listed.
- ***Potential Private Property/Ratepayer Impacts*** – Many of the Standards have the potential to impact private property owners or affect sewer rates. These impacts may include increased maintenance responsibilities for property owners, construction impacts, and cost increases or reductions.

Standard Details

The Standards and Guidelines also include a set of standard details that outline specific requirements for the construction of manholes, sewer mains, and side sewers to help prevent I/I from entering a new sewer system. The details only address specific features of sewer construction that impact I/I control, and are intended to augment current Local Agency standard details for sewer construction.

Similar to the Standards and Guidelines, the standard details were tested during the pilot project design and construction, and later revisited by the Earth Tech Team and reviewed by the E&P Subcommittee for any final revisions. A summary of the proposed changes to the working draft details and the Subcommittee's recommendations and accepted changes is included in Appendix A.

Summary of Standards and Guidelines

The following table provides a summary and brief description of the final draft Standards and Guidelines. A total of 40 standards/guidelines were incorporated into the final draft, with 28 being accepted by the Subcommittee as standards and 12 being accepted as guidelines.

Regional I/I Control Program

Summary of Listed Design Standards & Guidelines

Standard/Guideline Number & Title	Standard	Guideline	New Projects ONLY	Rehabilitation Projects ONLY	Both New & Rehabilitation Projects
PS-1: Storm Drainage Connections to the Sanitary Sewer	√				√
PS-2: Design Capacity for Pipeline Rehabilitation Projects	√			√	
PS-3: Visual Inspection of Manholes for SSES Investigations		√		√	
PS-4: Closed Circuit Television (CCTV) Inspection of Sewers for SSES Investigation		√		√	
PS-5: Smoke Testing for SSES Investigations		√		√	
PS-6: Dye Testing for SSES Investigations		√		√	
PS-7: Modeling and Engineering Analysis		√			√
PUB-1: Connections to Existing System	√				√
PUB-2: Pipe Anchoring	√				√
PUB-3: Manhole Location	√				√
PUB-4: Manhole Size	√				√
PUB-5: Manhole Joints	√				√
PUB-6: Side Sewer Connection Location and Taps	√				√
PUB-7: Sewer System Design	√				√
PUB-8: Abandonment Requirements	√				√
PUB-9: Pipe Rehabilitation Methods	√			√	
PUB-10: Manhole Rehabilitation		√		√	
PUB-11: Spot Repairs		√		√	
PUB-12: Manhole Leveling Rings	√				√
PUB-13: Manhole Lids/Inserts	√			√	
PUB-14: Root Intrusion	√			√	
PUB-15: Pipeline Leak Testing	√				√
PUB-16: Manhole Leak Inspection	√				√
PUB-17: CCTV Inspection	√				√
PUB-18: Inspection of Pipe Installation and Backfill	√				√
PUB-19: Product Specific Inspection	√				√
PUB-20: Certification, Warranty and Qualifications		√			√
PRV-1: Pipe Protection – Depth of Cover		√			√
PRV-2: Allowable Connections to Side	√				√

Standard/Guideline Number & Title	Standard	Guideline	New Projects ONLY	Rehabilitation Projects ONLY	Both New & Rehabilitation Projects
Sewers					
PRV-3: Pipe Zone Bedding and Trench Backfill		√			√
PRV-4: Pipe Materials		√			√
PRV-5: Inspection Wyes/Cleanouts	√				√
PRV-6: Lateral and Side Sewer Rehabilitation Methods		√		√	
PRV-7: Spot Repairs	√			√	
PRV-8: Root Intrusion	√			√	
PRV-9: Side Sewer/Lateral Leak Testing	√				√
PRV-10: Sanitary Side Sewer CCTV Requirements	√				√
PRV-11: Product Specific Inspection	√				√
PRV-12: Product Specific Certification	√				√
PRV-13: Bonding and Warranty Inspection	√				√
TOTAL ITEMS:	**28**	**12**	**0**	**13**	**27**

Table of Contents: Standards

I/I CONTROL STANDARD TITLE: Storm Drainage Connections to the Sanitary Sewer

STANDARD NO. PS-1

I/I CONTROL MEASURE ISSUE:
Direct connection of storm water collection systems to the sanitary sewer reduces the capacity of the collection system and increases surcharging potential of the pipe, which can contribute to sewer deterioration and increase the potential for pipeline collapse. Some agencies allow surface water runoff collected from areas subject to high pollutant loading to discharge to the sanitary sewer. Numerous connections of this type can overload both the Local Agency sanitary sewer collection system and the regional conveyance system.

STANDARD

- No storm drainage connections shall be made to the sanitary sewer system unless approved by the Local Agency first and then by King County, and only under special circumstances. The discharges shall be defined by discharge permit, contract or other such document.

POTENTIAL LOCAL AGENCY IMPACTS

- Provisions for water quality treatment from surface water collection areas subject to high pollutant loading that the agency may have previously connected to the sanitary sewer will need to be addressed.
- Requests to connect storm water collection areas to the sanitary sewer will have to be reviewed for conformance with the special circumstances negotiated between the Local Agencies and King County.
- Special fee structures may be adopted for connection of storm drainage sources to the sanitary sewer.

POTENTIAL KING COUNTY IMPACTS

- King County and the Local Agencies will need to determine the special circumstances under which a storm drainage collection source can be connected to the sanitary sewer system.

POTENTIAL PRIVATE PROPERTY/RATEPAYER IMPACTS

- No impact.

I/I CONTROL STANDARD TITLE: Design Capacity for Pipeline Rehabilitation Projects

STANDARD NO. PS-2

I/I CONTROL MEASURE ISSUE:
Many pipeline rehabilitation techniques for I/I control involve some loss in the hydraulic capacity of the system because the technique reduces the effective internal diameter of the pipe. Hydraulic capacity loss can range from moderate for techniques such as CIPP to high for techniques such as sliplining. Surcharging and sanitary sewer overflows can result if the hydraulic capacity is reduced below the required service capacity of the line.

STANDARD

- The design of pipeline rehabilitation projects for I/I control shall consider any loss in the hydraulic capacity of the system resulting from a decrease in the effective internal diameter of a pipeline. A Professional Civil Engineer shall verify that the rehabilitated pipe maintains the required hydraulic capacity to service peak demand flow projections for the area tributary to the pipeline.

POTENTIAL LOCAL AGENCY IMPACTS

- Agencies will need to verify that the project designer has addressed the hydraulic capacity of the pipeline.

POTENTIAL KING COUNTY IMPACTS

- King County will need to verify that the project designer has addressed the hydraulic capacity of the pipeline.

POTENTIAL PRIVATE PROPERTY/RATEPAYER IMPACTS

- No impact.

I/I CONTROL GUIDELINE TITLE: Visual Inspection of Manholes for SSES Investigations

GUIDELINE NO. PS-3

I/I CONTROL MEASURE ISSUE:
Manhole inspections are one of the most important efforts of an SSES investigation because manholes can account for up to 50 percent of the I/I entering a sanitary sewer system. The inspection provides a means for viewing the manhole internally to assist in:

- Determining whether the cover is subject to ponding or surface water runoff.
- Inspecting for internal leaks.
- Analyzing structural deficiencies in the manhole structure.
- Estimating I/I quantities in the manhole.

Investigation of the internal condition of a manhole should be conducted from the inside of the manhole. Performing the investigation only from the surface and failing to thoroughly check the manhole interior commonly results in an inadequate inspection. Leaks around taps in the manhole are often confused with flow from the tap itself. If not closely inspected, leaks on the floor, in the channel, and around the pipe seals are often misidentified as eddies in the normal pipe flow.

GUIDELINE

Visual inspection of manholes shall be performed by experienced personnel trained in the proper safety measures for performing the inspection including, but not limited to, confined space entry and traffic control measures. It is recommended that the visual inspection be performed during the wet season when surrounding soils are fully saturated. Results of the manhole inspections shall be documented on a standard form which contains the following information:

- Manhole identification or reference number and street location.
- The date of the inspection.
- Name of the inspector.
- Pavement surface type and condition.
- Cover information including size, number of pick holes, gasket condition, if present, and whether the cover is locking or not.
- Frame information including size, grade, condition and presence and condition of an internal boot.
- Chimney information including material and condition, diameter, height, seal condition at cone or top slab, presence and location of manhole steps, and evidence of infiltration.
- Cone information including type and condition, seal at barrel and evidence of infiltration.
- Barrel information including type, lateral locations, diameter and condition, seal at bench and bottom slab, and evidence of infiltration. Location and size of cracks and leak locations shall be documented.
- Condition of channel and bench concrete and location of infiltration at the flow line and bench.
- Presence, location and condition of drop connections.
- Whether the manhole cover is depressed below the adjacent surface grade and whether its location makes it subject to surface water flows or ponding.
- Significant site features that may affect rehabilitation access or methods, including whether the manhole is located on private property or is located near sensitive habitat.

Investigation of the internal manhole condition shall be conducted from inside the manhole if I/I is present in the manhole. Manhole inspection results shall be archived by the Local Agency.

POTENTIAL LOCAL AGENCY IMPACTS

- Training and upgrading of staffing skills to perform the manhole inspections and interpret results, if not contracted with outside vendors.
- Additional staff resources (FTEs) may be required.
- Additional staff time for conducting inspections, interpreting results, reporting and archiving of data.

POTENTIAL KING COUNTY IMPACTS

- Training and upgrading of staffing skills to perform the manhole inspections and interpret results, if not contracted with outside vendors.
- Additional staff resources (FTEs) may be required.
- Additional staff time for conducting inspections, interpreting results, reporting and archiving of data.

POTENTIAL PRIVATE PROPERTY/RATEPAYER IMPACTS

- No impacts.

I/I CONTROL GUIDELINE TITLE: Closed Circuit Television (CCTV) Inspection of Sewers for SSES Investigations

GUIDELINE NO. PS-4

I/I CONTROL MEASURE ISSUE:
CCTV inspection during a sewer system evaluation survey provides a safe, low-cost and rapid means for viewing the sewer line internally to assist in:

- Determining the physical condition of pipe joints.
- Analyzing structural deficiencies and corrosion in pipelines.
- Identifying sources of I/I.
- Estimating quantity of infiltration.
- Identifying changes in the sewer from the last CCTV inspection.

GUIDELINE

CCTV inspection of sewers for an SSES investigation shall include a complete television inspection of the sewer main and may include laterals and side sewers that connect to the main. It is recommended that the CCTV inspection be performed during the wet season when surrounding soils are fully saturated. The decision to CCTV inspect laterals and side sewers shall be based on evidence that a significant source of the I/I originates from the laterals or side sewers. The factors that shall be considered include:

- Flow monitoring data that suggests rapid infiltration.
- Lack of I/I sources identified from CCTV inspection of the sewer main or smoke testing.

Sewer cleaning shall be performed before beginning television inspection of sewer mains, laterals and side sewers. Television inspection shall be accomplished using a closed-circuit system specifically designed for sewer inspections. For each pipeline inspected, records shall be collected on both videotape and on a field form. The videotape shall include the date of the inspection and a brief narrative description of the pipeline being inspected (manhole to manhole run, or service address) and discuss each defect that is observed. Field forms for sewer main inspections shall contain the following information:

- The date of the inspection.
- Name of CCTV crew members and their company or agency.
- The reason for the inspection.
- The location of the pipeline and the upstream and downstream manhole numbers.
- The direction of the camera's travel.
- The pipe size, type, pipe joint length, and overall footage of the inspected sewer.
- The location and a description of each service connection.
- A description of each defect observed and its distance from the point at which the viewing began.
- Severity of I/I at each defect location.

Field forms for lateral and side sewer inspections shall contain the following information:

- The date of the inspection.
- Name of CCTV crew members and their company or agency.
- The reason for the inspection.
- The service address.
- The pipe size, type, pipe joint length, and overall footage of the inspected lateral/side sewer.
- A description of each defect observed and its distance from the point at which the viewing began.
- Severity of I/I at each defect location.
- The location and a description of any observed connections to the lateral/side sewer.

Field forms and videotape of inspections shall be archived by the Local Agency so that they may be compared to subsequent CCTV inspections that are performed on the same portions of the line. Digital

footage of the CCTV inspection is an acceptable alternative to videotaped footage.

POTENTIAL LOCAL AGENCY IMPACTS

- Training and upgrading of staffing skills to perform the CCTV inspections and interpret results, if not contracted with outside vendors.
- Additional staff resources (FTEs) may be required.
- Acquisition of CCTV inspection equipment and vehicles, or contracting with outside vendors.
- Additional staff time for conducting inspections, interpreting results, reporting and archiving of data.
- Additional cost for CCTV of laterals/side sewers.

POTENTIAL KING COUNTY IMPACTS

- Training and upgrading of staffing skills to perform the CCTV inspections and interpret results, if not contracted with outside vendors.
- Additional staff resources (FTEs) may be required.
- Acquisition of additional CCTV inspection equipment and vehicles, or contracting with outside vendors.
- Additional staff time for conducting inspections, interpreting results, reporting and archiving of data.

POTENTIAL PRIVATE PROPERTY/RATEPAYER IMPACTS

- No impact.

I/I CONTROL GUIDELINE TITLE: Smoke Testing for SSES Investigations

GUIDELINE NO. PS-5

I/I CONTROL MEASURE ISSUE:
Smoke testing is the process of blowing a nontoxic smoke made from mineral oil at low pressure into the sewer system. Smoke testing provides a low-cost and rapid means for determining direct connections of inflow and rainfall-induced infiltration sources, such as:

- Roof drains
- Foundation drains
- Catch basins
- Area drains
- Abandoned building sewers
- Uncapped cleanouts
- Illegal connections
- Storm sewer cross connections

GUIDELINE

Smoke testing for SSES investigations shall be performed by experienced personnel who know the effects of groundwater table, frozen ground, wind, rain, trapped service connections and snow cover on the test findings. Smoke used for the testing shall be non-toxic, odorless and non-staining. Blower capacity shall be determined based on the size of area to be tested, but in no case shall it be less than 1,750 cfm. The vacuum effect of flowing water drawing smoke downstream shall be taken into account. Police and fire departments shall be notified daily of test locations, and residents shall be notified in advance of the testing by a written testing notice. Residents shall also be informed individually on the day of testing by personnel having proper identification. The following chronological steps shall be used for smoke testing:

- Isolate the sewer main line to be tested with plugging up to 400 feet at a time noting any surcharged line sections. Smoke will not pass through a flooded section.
- Prepare a basic smoke sketch of the area being tested including location, date and the name of the company or agency and personnel performing the test.
- Commence smoke testing using one blower at each manhole and enough smoke bombs to ensure smoke travels throughout the entire test section. Smoke shall be continuously generated while visual inspection and photography are in progress.
- Visually inspect the entire area by walking around front and back yards and around buildings. Watch for smoke leaks; typical sources are roof leaders, area drains, foundation drains, house foundations, holes in the ground over the sewer or services, areas around manholes, and catch basins. Roof vents are not to be considered as smoke leaks.
- Document whether or not smoke is observed to be discharging through the roof vents for each house and building included in the test area.
- Photograph all smoke leaks.
- Show the location of each leak on a sketch. Include the photograph number and compass directions taken, and a description of the leak including address. Provide dimensions to the leak from at least two easily identified site features and the estimated area (square footage) and surface type (i.e., grass, pavement, etc.) drained by the leak.
- Photographs shall show the maximum amount of smoke emitted from the leak and the exact source of the leak. Photographs shall be taken from far enough back to provide a physical reference to the location of the smoke. They shall be numbered consecutively to ensure leaks can be identified at a later date.

POTENTIAL LOCAL AGENCY IMPACTS

- Time and resources to conduct smoke testing, if not already part of agency procedures.
- Acquisition of smoke testing equipment, if not already owned.
- Cost for additional staff workload, or contract with outside vendor.

POTENTIAL KING COUNTY IMPACTS

- Cost for additional staff workload, and contract with outside vendor.

POTENTIAL PRIVATE PROPERTY/RATEPAYER IMPACTS

- Identified defects and illicit connections on private property may need to be corrected by the property owner.

I/I CONTROL GUIDELINE TITLE: Dye Testing for SSES Investigations

GUIDELINE NO. PS-6

I/I CONTROL MEASURE ISSUE:
Dye testing is a rainfall simulation technique used to identify specific defects that can contribute I/I during rainfall or snowmelt. Dye testing can also be effective in quantifying the amount of I/I that can enter a section of sewer or specific defect under a controlled runoff situation. Depending on the sources of I/I to be identified and the configuration of the runoff situation being simulated, the procedures for dye testing differ. Five examples of dye testing situations are as follows:

- **Determining Conditions Caused by Storm Drains**—Storm drains that parallel or cross sanitary sewer pipes and have an invert elevation higher than the crown elevation of the sanitary sewer can be a source of rainfall-induced infiltration or inflow. They are inflow sources if there are cross connections between the storm drain and the sanitary sewer; they are infiltration sources if stormwater can exfiltrate from them, percolate through soil, and enter the sanitary sewer through pipe or joint defects.
- **Determining Conditions Caused by Stream or Ditch Sections**—Streams and stormwater ditches are inflow sources if there are cross connections between them and the sanitary sewer; they are infiltration sources if the surface water can percolate through soil and enter the sanitary sewer through pipe or joint defects.
- **Identifying I/I Sources from Private Property**—Roof leaders; basement, yard and area drains; foundation drains; abandoned building sewers; and faulty connections are sources of private property defects that can be identified by dye testing.
- **Identifying Structurally Damaged Manholes**—Dye testing can be used to verify structurally damaged manholes that leak when subjected to flooding or when groundwater elevations are high.
- **Verifying Sources Found by Other Testing Means**—Dye testing can verify suspected sources of I/I identified in a visual survey or smoke testing study. Examples include manholes affected by surface water runoff, holes in the ground smoking over services or sewer mains, and cracks in the street pavement that are smoking.

GUIDELINE

Dye testing for SSES investigations shall be performed by experienced personnel trained in the proper safety measures for performing the testing including, but not limited to, confined space entry into storm drain and sanitary sewer manholes, measures for controlling water head buildup behind plugs, and traffic control measures. A fluorescent dye having a distinct color readily detectible by eye shall be used for dye testing. The dye shall be safe to handle, visible in low concentrations, miscible in water, biodegradable and inert to solids and debris in the sewer. Procedures for dye testing shall be as follows:

Determining Conditions Caused by Storm Drain

1. Plug both ends of the storm drain section to be tested with sand bags or sewer plugs and block all overflow and bypass points in the storm drain section. Bypass flow around the section under test if necessary.
2. Fill the storm drain section and stormwater inlets or catch basins to just below the grate with water. Add dye to the water.
3. Monitor the next downstream manhole in the sanitary sewer system for evidence of dyed water.
4. Measure the flow in the sanitary sewer manhole before and during dye testing. As an alternative, measure flow simultaneously at both the upstream and downstream sanitary manholes during the test.
5. Record the location of storm drain and sanitary sewer lines being tested; the time and duration of

the tests; the manholes where the flows are monitored; the observed presence, concentration and travel time of the dyed water to the flow monitoring manholes; and the soil characteristics.

Determining Conditions Caused by Streams or Ditch Sections

1. Plug or dam stream sections, ditch sections or ponded areas to be tested and fill to desired level with dyed water. Bypass flow around the section under test if necessary.
2. Follow steps 3 through 5 above.

Identifying Sources on Private Property

1. Notify property owners and receive permission for testing in advance of testing.
2. Insert dyed water into suspected inflow source and monitor closest downstream sanitary sewer manhole for evidence of dyed water.
3. Record the date of the test; address and type of the inflow source; duration of the test; the manholes where the flows are monitored; and the observed presence, concentration and travel time of the dyed water to the flow monitoring manholes.

Identifying Structurally Damaged Manholes

1. Flood the area around suspected manholes with dyed water.
2. Monitor manhole frame, chimney, cone and manhole walls for entry of dyed water.
3. Record the date of the test; manhole number; duration of the test; and the observed presence, concentration and travel time of the dyed water into the manhole.

Verifying Sources Found by Other Testing Means

1. Notify property owners and receive permission for testing in advance of testing if performed on private property.
2. Flood the area where visual survey or smoke testing study revealed potential I/I source. It may be necessary to restrict runoff from the area with sand bags to allow the area to become saturated.
3. Monitor the next downstream manhole in the sanitary sewer system for evidence of dyed water.
4. Measure the flow in the sanitary sewer manhole before and during dye testing. As an alternative, measure flow simultaneously at both the upstream and downstream sanitary manholes during the test.
5. Record the location of sources being tested, including address if on private property; the time and duration of the tests; the manholes where the flows are monitored; the observed presence, concentration and travel time of the dyed water to the flow monitoring manholes; and the soil characteristics.

A field log shall be filled out for all dye tests that are performed, regardless of whether a positive transference to the sanitary sewer is observed. A sketch of each testing setup shall be prepared showing testing location, manholes checked, dye transference information, and flooding time. The sketch shall also include the date and time of the test and the names of personnel. A photograph of each testing setup shall be taken and numbered. Photographs of the testing setup shall be referenced on the setup sketch. The appropriate agencies shall be notified of impending dye testing prior to test commencement.

POTENTIAL LOCAL AGENCY IMPACTS

- Obtaining required permits for handling and disposal of test water volumes.
- Obtaining and appropriately disposing of test water volumes.
- Cost for additional staff workload, or contract with outside vendor.

POTENTIAL KING COUNTY IMPACTS

- Obtaining required permits for handling and disposal of test water volumes.
- Obtaining and appropriately disposing of test water volumes.
- Cost for additional staff workload, or contract with outside vendor.

POTENTIAL PRIVATE PROPERTY/RATEPAYER IMPACTS

- Property owners need to provide permission to perform testing on private property.
- Some disturbance to yards/landscaping could occur during testing.

I/I CONTROL GUIDELINE TITLE: Modeling and Engineering Analysis

GUIDELINE NO. PS-7

I/I CONTROL MEASURE ISSUE:
Following the completion of the basin modeling performed during the Regional I/I Control Program, the modeling basins should be reevaluated with updated flow and system network information to provide an ongoing tool for monitoring the integrity of the sewer system as it both ages and expands. Hydraulic models can also be used to evaluate system response to potential high-flow sources such as high-water-use industries, adjoining jurisdictions, or large developments.

GUIDELINE

- Basin modeling shall be conducted to assess system loading and capacity for ongoing and future sewer planning efforts. A dynamic software modeling program should be used that can be used to calibrate measured flow data with rainfall measured during the corresponding storm. The maximum model basin size shall be equivalent to the basins modeled by King County. Consideration should be given to selecting software that will provide output compatible with the King County model. Flow data shall be obtained by the Local Agency using the same methodology developed in the Regional I/I Control Program, including measurement of wet-weather/storm conditions and concurrent rainfall data. The flow monitoring preferably will coincide with the basins delineated for the King County I/I Control Program.
- Development of a reliable, well-calibrated model requires good as-built plans and maps, and long-term flow monitoring data. The agency shall maintain an as-built record for new and modified piping.

POTENTIAL LOCAL AGENCY IMPACTS

- Competency of staff in computer modeling and interpretation, or outsourcing to a consultant on a periodic basis.
- Proactive planning and logistics for maintaining an as-built database.
- Purchase of license for a sewer software model, or cost to develop alternative model.
- Cost for training and operation of model by agency staff.
- Expense for flow monitoring equipment and staff, whether purchased or leased/rented on a periodic basis.

POTENTIAL KING COUNTY IMPACTS

- No impact, since King County now performs modeling analysis on a regular basis.

POTENTIAL PRIVATE PROPERTY/RATEPAYER IMPACTS

- No impact.

I/I CONTROL STANDARD TITLE: Connections to Existing System

STANDARD NO. PUB-1

I/I CONTROL MEASURE ISSUE:
When new connections are made to the existing system, I/I potential exists from three general locations: 1) the connection itself leaks, 2) the system being added has leaks, and/or 3) the system being added has illegal connections that are inflow sources.

STANDARD

- Connections to the existing system will only be allowed at manholes, to a main via an existing tee or a tap, or to the end of an existing pipe that meets all applicable I/I Standards.
- Where a new manhole is being installed in an existing system, the I/I Standards for new manholes shall apply.

Testing and inspection:

- The new conveyance system to be connected shall be inspected to confirm that no illicit connections contributing inflow have been added.
- At manhole locations, the connection at the existing manhole shall be visually inspected for water tightness after the pipe has been completely backfilled and groundwater has returned to its natural elevation. The new line shall not be put into service until the connection has been inspected and approved.

POTENTIAL LOCAL AGENCY IMPACTS

- Inspection requirements to confirm work performed correctly.

POTENTIAL KING COUNTY IMPACTS

- No impact. King County already providing full-time inspection for construction and testing of new pipelines.

POTENTIAL PRIVATE PROPERTY / RATEPAYER IMPACTS

- No impact.

I/I CONTROL STANDARD TITLE: Sewers on Steep Slopes

STANDARD NO. PUB-2

I/I CONTROL MEASURE ISSUE:
Pipe that is installed on steep slopes is more susceptible to movement, breakage, and slipped joints, which may allow I/I into the system. Special measures to anchor pipes installed on steep slopes may be required depending on the stability of the existing soils, local groundwater conditions, and the quality of the bedding and backfill construction during pipe installation.

STANDARD

- Sewer mains on steep slopes shall be designed by a Professional Engineer to ensure the integrity of the system to prevent leakage and minimize I/I.

POTENTIAL LOCAL AGENCY IMPACTS

- Agencies will need to verify that a Professional Engineer has addressed pipe anchoring requirements on steep slopes.
- Pipe anchors can cost as much as $1,000 each; however anchors are typically a requirement on steep slope pipeline installations.
- Inspectors will need to verify that anchors are installed as designed.

POTENTIAL KING COUNTY IMPACTS

- The County will need to verify that a Professional Engineer has addressed pipe anchoring requirements on steep slopes.
- Pipe anchors can cost as much as $1,000 each; however anchors are typically a requirement on steep slope pipeline installations.
- Inspectors will need to verify that anchors are installed as designed.

POTENTIAL PRIVATE PROPERTY/RATEPAYER IMPACTS

- No impact.

I/I CONTROL STANDARD TITLE: Manhole Location and Covers

STANDARD NO. PUB-3

I/I CONTROL MEASURE ISSUE:
Placement of manholes is important for two reasons. The potential for I/I will decrease by not placing it in a location subject to surface water flows or ponding. Proper location can improve an agency's ability to inspect and maintain the system, thus reducing I/I. When manholes must be placed in areas subject to surface water flows, inflow can be prevented by providing a watertight frame and cover system.

STANDARD

- Manholes shall not be installed in areas subject to surface inundation such as pavement depressions and gutters. If this cannot be avoided, then the entire manhole, including cover, shall be designed as a watertight system. Buoyancy of the watertight manhole shall be accounted for in the design. For manholes placed in lakes or ponds a special watertight manhole, including access system, shall be designed to prevent leakage and to insure maintainability.
- For manholes located in paved roadways, parking lots, or other areas that become subject to channelized stormwater flow due to re-grading, the manhole shall be retrofit with a watertight frame and cover system to prevent inflow.
- Watertight frame and covers shall consist of a solid, gasketed cover or an approved manhole cover insert that stops the inflow of surface water into the manhole. Manhole cover inserts may be installed beneath a standard cover. Manhole cover inserts shall be in conformance with Standard Detail MH-3.

POTENTIAL LOCAL AGENCY IMPACTS

- Added cost for watertight design in areas that may not now be required to be watertight.
- Sewer system plan review would need to include an assessment of locations where manhole cover inserts are required.
- Field inspection to ensure watertight manhole covers are installed where specified would be required.

POTENTIAL KING COUNTY IMPACTS

- Added cost for watertight design in areas that may not now be required to be watertight.
- Sewer system plan review would need to include an assessment of locations where manhole cover inserts are required.
- Field inspection to ensure watertight manhole covers are installed where specified would be required.

POTENTIAL PRIVATE PROPERTY/RATEPAYER IMPACTS

- Potentially higher ratepayer cost for watertight design.

I/I CONTROL STANDARD TITLE: Manhole Size

STANDARD NO. PUB-4

I/I CONTROL MEASURE ISSUE:
Providing a watertight seal at pipe penetrations is difficult when new or existing manholes are too small to accommodate all penetrations for incoming and outgoing pipes. Provisions to provide a minimum distance between manhole knockouts and minimum manhole sizes based on pipe size insure a watertight pipe connection can be made and help prevent structural failure of the manhole.

STANDARD

- New manholes shall be sized so that the minimum distance between knockouts is in accordance with the requirements of the WSDOT/APWA Standard Specifications and the manhole manufacturers standards. A connection detail stamped and signed by a Professional Civil Engineer and approved by the manhole manufacturer shall be provided where the minimum distance between openings cannot be maintained.

POTENTIAL LOCAL AGENCY IMPACTS

- Review of manhole shop drawings are required to insure that the minimum sizing and spacing requirements are being met, or that a connection detail prepared by a Professional Engineer is being provided.
- Manhole construction costs may increase moderately in those agencies that allow contractors to make connections to existing manholes or size new manholes without requiring the specified minimum sizes or distance between knockouts and adjacent pipe connections.
- Inspection of manhole construction is required to insure that the pipe locations and connections are as detailed and not field modified.

POTENTIAL KING COUNTY IMPACTS

- Review of manhole shop drawings is required to insure that the minimum sizing and spacing requirements are being met, or that a connection detail prepared by a Professional Engineer is being provided.
- Inspection of manhole construction is required to insure that the pipe locations and connections are as detailed and not field modified.

POTENTIAL PRIVATE PROPERTY/RATEPAYER IMPACTS

- Potentially higher ratepayer costs in those agencies that do not require minimum distances between knockouts.

I/I CONTROL STANDARD TITLE: Manhole Joints

STANDARD NO. PUB-5

I/I CONTROL MEASURE ISSUE:
Joints in manholes present potential sources of I/I from the precast concrete manhole segments to adjustments rings and pipe penetrations.

STANDARD

- All manholes shall be completely watertight from the top of the casting down.
- Manholes materials and construction shall be in accordance with WSDOT/APWA Standard Specifications except as modified by this standard and Standard Details MH-1 and MH-2.
- Precast concrete manhole sections shall be joined with either rubber or flexible plastic gaskets.
- All lifting holes shall be completely filled with non-shrink grout.
- Typical pipe penetrations through precast concrete sections shall be either factory knockouts or core drilled (not line drilled or rough broken) cutouts. Pipe shall enter the manhole through a rubber gasketed entry coupling specifically design for a flexible, watertight connection either cast into the manhole section or grouted in place with non-shrink grout.
- Where a new manhole is being constructed as a "saddle manhole", which is built around an existing sewer main, the manhole shall be designed by a Professional Civil Engineer. The saddle manhole shall be of sufficient diameter to provide a watertight connection between the manhole and the wall of the existing pipe.

POTENTIAL LOCAL AGENCY IMPACTS

- No major impact because most agencies currently meet this standard.

POTENTIAL KING COUNTY IMPACTS

- No impact because King County currently meets this standard.

POTENTIAL PRIVATE PROPERTY/RATEPAYER IMPACTS

- No impacts.

I/I CONTROL STANDARD TITLE: Side Sewer Connection Location and Taps

STANDARD NO. PUB-6

I/I CONTROL MEASURE ISSUE:
The location of a side sewer connection to a mainline in an area with difficult access or in such a manner as to induce unnecessary stress on the system can make them more prone to damage and less apt to be maintained, thus resulting in I/I. Good construction techniques and proper selection of materials for side sewer taps can reduce I/I by protecting the mainline from damage by providing a watertight seal.

STANDARD

- No side sewers shall be connected to a main located in a lake or similar body of water except under special circumstances.
- If a side sewer must be connected at a manhole, then it shall penetrate the manhole wall through a watertight rubber gasketed factory manhole adapter specially designed for the side sewer material type. A mortared connection at a manhole will not be permitted unless the structure is constructed as a saddle manhole.
- All connections to existing mains shall be made at an existing tee fitting or by core drilling a hole in the existing sewer main and installing an approved gasketed factory sewer saddle or cutting in a gasketed factory tee. The Local Agency may consider other connection alternatives if the method can be demonstrated to provide a watertight connection. Line drilling or rough breakouts shall not be used.
- For a tapped connection to the mainline, the hole shall be as small as possible to accommodate the outside diameter of the side sewer pipe with adequate space for minor angle alignment adjustments of the side sewer. The connection shall be made with a factory saddle specifically designed for side sewer connections and fabricated of corrosion resistant materials and mechanically attached to the pipe to withstand the anticipated loads. The saddle shall provide a rubber gasketed joint between the sewer main and the saddle.
- Factory tees shall be appropriate for the soil conditions encountered in the connection location and shall have rubber gasketed joints. Material selection shall take into account the soil corrosistivity, compatibility of materials with the existing pipe, strength requirements, and bedding/backfill conditions. The tee shall be connected to the existing sewer main pipe by short sections of plain end pipe and an approved stainless steel repair clamp. The short sections of pipe shall match the sewer main pipe material and shall meet or exceed the strength of the existing system. Stainless steel repair clamps shall be gasketed, with a minimum length of two pipe diameters, and assembled with all stainless steel bolts and nuts.

POTENTIAL LOCAL AGENCY IMPACTS

- Inspection requirements to confirm compliance with standards or do tap itself.
- Moderate cost of using saddles.
- High cost of using cut in tees and dealing with active sewer line.

POTENTIAL KING COUNTY IMPACTS

- No impact, since King County does not normally allow side sewer connections to its conveyance system.

POTENTIAL PRIVATE PROPERTY/RATEPAYER IMPACTS

- Added cost for doing the tee when the side sewer is too large for a tap.
- Added cost to core drill the pipe.

I/I CONTROL STANDARD TITLE: Sewer System Design

STANDARD NO. PUB-7

I/I CONTROL MEASURE ISSUE:

Structural failure of pipe and manholes can lead to infiltration of groundwater. The following are key factors contributing to the impairment of a sewer systems' structural abilities, resulting in I/I:

- Sewer mains, manholes, laterals and side sewers that are not properly supported are subject to vertical displacements over time, causing joints to open and pipeline trenches to settle, producing cracks or breaks in sections of the pipe.
- Materials must be appropriate for design conditions and the ground conditions present. Pipeline failures often occur due to the misuse of materials.
- Structural failure of sewer pipes allows groundwater to enter the system at the point of connection to manholes. Deep cuts and poor ground conditions often result in a larger than necessary excavation, leading to unequal settlement if uniform support is not provided for the pipe and manhole. Inadequate support often causes failure of the pipe in shear at the manhole and provides a point of entry for groundwater.

Recognizing past situations that have allowed extraneous flows to enter the system and requiring sound and appropriate design measures to prevent these deficiencies on future projects can greatly reduce future I/I.

STANDARD

- Sewer system design shall be performed by a civil engineer licensed in the State of Washington. The designer shall verify that sound and appropriate standards and measures have been employed in the design of new sewer systems. This shall include the choice of sewer materials for the design conditions, pipe bedding and backfill requirements, and the evaluation for pipe casing requirements.

POTENTIAL LOCAL AGENCY IMPACTS

- Agencies will need to verify that the designer has adequately addressed elements of the sewer design that relate to the structural integrity of the system.

POTENTIAL KING COUNTY IMPACTS

- King County will need to verify that the designer has adequately addressed elements of the sewer design that relate to the structural integrity of the system.

POTENTIAL PRIVATE PROPERTY/RATEPAYER IMPACTS

- No impacts.

I/I CONTROL STANDARD TITLE: Abandonment Requirements

STANDARD NO. PUB-8

I/I CONTROL MEASURE ISSUE:
Abandoned sewer pipes and manholes that are not completely isolated from the remaining system pose potential sources for I/I. Abandoned sewer mains are defined as any section of pipe extended beyond a manhole with no services attached and no plan for future extension or service connection(s). Abandoned side sewers fall into two categories. If no future connection is anticipated, then the entire side sewer from the main is considered abandoned. If a future connection is anticipated, then the side sewer shall be considered abandoned at the property line.

STANDARD

- Manholes: Manholes shall not be abandoned if they are on the end of an active sewer main. If the manhole is part of an abandoned pipe system, then it shall be completely filled and all pipes physically connected to the manhole shall be plugged.
- Sewer Main Pipe: Abandoned sewer main pipes shall be plugged with a minimum of length of 3 pipe diameters with a non-shrink grout or other impermeable material at the manhole. The pipe shall be prepared to provide a watertight bond between the plug material and existing pipe.
- Sewer Main Abandonment Inspection: The plug shall be visually inspected for any leaks during the wet season while under warranty.
- Side Sewers: Abandoned side sewer pipe shall be capped with a watertight plug for future use or plugged with a minimum of length of 3 pipe diameters with a non-shrink grout or other impermeable material. The pipe shall be prepared to provide a watertight bond between the plug material and existing pipe.
- Side Sewer Abandonment Inspection: Plugged side sewers shall be CCTV inspected for leakage at the sewer main connection during the wet season while under warranty.

POTENTIAL LOCAL AGENCY IMPACTS

- Inspection requirements to confirm that the work was done correctly.

POTENTIAL KING COUNTY IMPACTS

- No impact, since pipe abandonment is not anticipated in the King County system.

POTENTIAL PRIVATE PROPERTY/RATEPAYER IMPACTS

- Potentially higher ratepayer costs for increased inspection costs.

I/I CONTROL STANDARD TITLE: Pipe Rehabilitation Methods

GUIDELINE NO. PUB-9

I/I CONTROL MEASURE ISSUE:
Once the decision has been made to rehabilitate a sewer to control I/I, several alternatives may be used to replace the existing sewer. These include trenchless rehabilitation techniques such as cure-in-place lining, pipe bursting and conventional dig and replace. An evaluation should be made to determine suitability (technical and cost effectiveness) of trenchless methods versus conventional dig and replacement of the sewer. The technical evaluation should assess specific issues such as the sewer location, alignment, condition of the pipe being replaced, and future service requirements for the sewer. If the rehabilitation technique will reduce the cross sectional flow area of the pipe the technical evaluation should consider loss in hydraulic capacity of the line in accordance with the I/I Design Capacity for Pipeline Standard. The alternative pipe rehabilitation methods that should be considered include:

Pipe bursting is a trenchless pipeline rehabilitation method that can be used to replace sewer pipes. Reduction of excess flow is achieved by eliminating sources of infiltration in the piping being replaced. It is possible to increase the size of the pipe; however, site specific constraints may limit the ability to increase the size. Using pipe bursting to replace a pipe may be restricted depending upon adjacent utilities, proximity to a road surface, the type of existing pipe being replaced, and soil conditions. There are a number of variations on pipe bursting such as pneumatic, hydraulic expansion, and static pull systems. All of these displace the old pipe into the adjacent ground and pull a new pipe in to replace the old pipe. There are also related processes such as pipe reaming, which is a variation of horizontal directional drilling, where pieces of the old pipe are removed rather than pushing them into the adjacent soil. Pipe bursting may be used for mainline, lateral, and side sewer repair. The most common pipe material used is HDPE but other types of pipe material such as cast iron, MDPE, and ABS can be used for the replacement pipe.

Cure-in-place pipe (CIPP) liner is a trenchless pipeline rehabilitation method that can be used to repair existing sewer pipes. Reduction of excess flow is achieved by eliminating sources of infiltration in the piping being rehabilitated. CIPP liner involves inverting an epoxy-resin-impregnated flexible tube into an existing line using hydrostatic head. The resin is then cured using heat to produce a pipe inside the existing pipe. The outside diameter of the replacement pipe is smaller than the existing pipe to allow the system to be installed. Capacity in the pipeline will be reduced because of the reduction in pipe size.

Slip lining is a trenchless pipeline rehabilitation method that can be used to replace sewer pipes. Reduction of excess flow is achieved by eliminating sources of infiltration in the pipe being replaced. Slip lining involves pushing or pulling a replacement pipe into an existing pipe. The outside diameter of the replacement pipe is smaller than the inside diameter of the existing pipe to allow the replacement pipe to be installed. Capacity in the pipeline will be reduced because of the reduction in pipe size. A variety of pipe materials may be used for slip lining including HDPE, ductile iron, PVC, concrete and fiberglass. The annular space should be grouted unless there are project specific reasons to do otherwise.

Fold and form lining is a trenchless pipeline rehabilitation method that can be used to repair existing sewer pipes. Reduction of excess flow is achieved by eliminating sources of infiltration in the piping being replaced. The fold-and-form process involves inserting a heated PVC or HDPE thermoplastic liner, folded or deformed into a U-shape, into an existing sewer and re-rounding the liner using heat and pressure to produce a pipe inside the existing pipe. The outside diameter of the replacement pipe is smaller than the existing pipe to allow the system to be installed. Capacity in the pipeline will be reduced because of the reduction in pipe size.

GUIDELINE

- Construction standards for pipe bursting, cure-in-place lining, slip-lining and folded and formed liners shall be as follows:
- Pipe Bursting:
  - Pipe bursting shall meet the requirements of the King County Regional Inflow and Infiltration Control Program Guide Specifications.
- Cure-in-Place Lining:
  - Cure-in-place-lining shall meet the requirements of the King County Regional Inflow and Infiltration Control Program Guide Specifications.
  - Service connections to the new lined pipe shall be made water tight by grouting the area where the service connection enters the lined pipe or by installing a service connection rehabilitation liner in conformance with the King County Regional Inflow and Infiltration Control Program Guide Specifications.
- Slip Lining:
  - Slip lining shall conform to ASTM F585-94 – "Standard Practice for Insertion of Flexible Polyethylene Pipe Into Existing Sewers".
  - The type of replacement pipe used shall meet or exceed the requirements for sewer pipe materials in I/I Pipe Materials Standard and shall be suitable for the slip lining process being used.
  - New pipe connections to manholes shall provide a water tight connection suitable for the type of replacement pipe being used and in accordance with the I/I Connections to Existing System Standard. Acceptable manhole connections may include commercially available manhole connection boots or the pipe grouted into the manhole pipe penetration with a seep ring on the pipe.
  - Lateral connections to the new pipe shall also be made using commercially available fittings suitable for the type of replacement pipe. For HDPE pipe, lateral wyes or tees shall be made using manufacturer provided fusion welded fittings or other Local Agency approved fittings specifically manufactured for HDPE pipe.
  - The annular space shall be grouted unless there are project specific reasons to do otherwise. Issues to be considered relative to the annular space grouting include grouting pressures and pipe restraint to prevent floatation.
- Fold and Form:
  - Fold and form-lining shall meet the requirements of the King County Regional Inflow and Infiltration Control Program Guide Specifications.

POTENTIAL LOCAL AGENCY IMPACTS

- Inspection requirements to confirm that the trenchless rehabilitation is done correctly.

POTENTIAL KING COUNTY IMPACTS

- Inspection requirements to confirm that the trenchless rehabilitation is done correctly.

POTENTIAL PRIVATE PROPERTY/RATEPAYER IMPACTS

- No impact.

I/I CONTROL STANDARD TITLE: Manhole Rehabilitation

GUIDELINE NO. PUB-10

I/I CONTROL MEASURE ISSUE:
Manhole rehabilitation can be used to eliminate sources of both infiltration and inflow directly into the structure where the rehabilitation is determined to be more cost effective than replacement of the manhole. There are a variety of rehabilitation techniques, including manhole grouting, cementitious spray-on lining, epoxy linings, manhole inserts, and cure-in-place liners. Many of the methods provide benefits other than just I/I reduction such as protection from internal corrosion due to hydrogen sulfide. Manhole rehabilitation for I/I reduction may also include replacement of manhole rings or replacement of the ring and cover.

GUIDELINE

- When a manhole is rehabilitated for I/I reduction, consideration shall be given to factors that contributed to the current condition and whether the selected rehabilitation will prevent the potential recurrence of I/I. Rehabilitation techniques include spray on coatings, cure-in-place linings, chemical grouting, or a rigid liner installed within the existing manhole. Coatings, linings and chemical grouting for manhole rehabilitation shall meet the requirements of the King County Regional Inflow and Infiltration Control Program Guide Specifications.

POTENTIAL LOCAL AGENCY IMPACTS

- Inspection requirements to confirm that the manhole preparation and rehabilitation is done correctly.
- Potential surface disruptions resulting from construction of the rehabilitation.
- Costs to test the completed manhole rehabilitation.

POTENTIAL KING COUNTY IMPACTS

- Costs to test the completed manhole rehabilitation.
- Inspection requirements to confirm that the manhole preparation and rehabilitation is done correctly.

POTENTIAL PRIVATE PROPERTY/RATEPAYER IMPACTS

- Potential inconveniences resulting from rehabilitation construction activities.

I/I CONTROL STANDARD TITLE: Spot Repairs

GUIDELINE NO. PUB-11

I/I CONTROL MEASURE ISSUE:
Pipeline spot repairs are repairs to specific deficiencies in a pipeline, such as a specific leaking pipe joint. These repairs can be a cost effective way to eliminate I/I in sections of a pipeline that are sound except for a few point locations. Only those specific deficiencies in the pipeline are repaired. In general, in pipeline sections that require three or more spot repairs, it is often more cost effective to consider the entire manhole-to-manhole run of pipe for rehabilitation or replacement.

GUIDELINE

- Spot repairs can be accomplished by several different methods from trenchless systems like short CIPP liners, to injecting epoxy resins or chemical grout into leaking pipe joints, to dig and repair with structural grouting sleeves or short sections of pipe replacement. The repair method shall address whether the defect is structural or limited to intact leaky joint. Spot repairs may be needed to properly prepare the line for some of the manhole-to-manhole rehabilitation/replacement options.
- For a dig and replace spot repair, the section of the sewer main shall be removed to the nearest joint and replaced with new pipe. The new section of pipe shall be installed with repair couplings meeting the Local Agency's approval but in any case shall provide a water tight repair.
- Trenchless spot repairs shall meet the I/I standard for the particular rehabilitation method used.
- If SSES reveals there are 3 or more defects that require repair on a manhole to manhole run of sewer main, it is recommended that the entire run of sewer be evaluated for rehabilitation or replacement.

POTENTIAL LOCAL AGENCY IMPACTS

- The costs associated with testing and inspecting the spot repair.
- Surface disruptions from construction activities may inconvenience the public.

POTENTIAL KING COUNTY IMPACTS

- The costs associated with testing and inspecting the spot repair.

POTENTIAL PRIVATE PROPERTY/RATEPAYER IMPACTS

- No impact.

I/I CONTROL STANDARD TITLE: Manhole Leveling Rings

STANDARD NO. PUB-12

I/I CONTROL MEASURE ISSUE:
The manhole grade-adjustment rings for the frame and cover can be a source of infiltration.

STANDARD

- Materials for grade adjustment of manholes shall consist of precast concrete rings specifically designed for the diameter of the manhole entrance and anticipated loads. Other materials for the rings may be considered provided they provide adequate support, are impermeable, provide a watertight seal, and have a serviceable life expectancy of 50 years or over.
- Adjustments of the frame and cover shall be made with precast concrete rings and joined with mortar meeting the requirements of Section 9-04.3 of the WSDOT/APWA Standard Specifications or flexible plastic/mastic gaskets. If leveling rings are used that are manufactured from materials other than concrete, the installation of the rings and adjustment to grade shall be in accordance with the manufacturer's recommendations.
- If mortar joints are used, consideration shall be given to infiltration leakage that could occur through the rings. This may include wrapping the full height of the exterior of the manhole rings with a membrane sealing system.
- Testing and inspection: If mortar joints are used, they shall be inspected before backfilling.

POTENTIAL LOCAL AGENCY IMPACTS

- Additional cost of inspection and testing of the manhole.

POTENTIAL KING COUNTY IMPACTS

- Additional cost of inspection and testing of the manhole.

POTENTIAL PRIVATE PROPERTY/RATEPAYER IMPACTS

- No impacts.

I/I CONTROL STANDARD TITLE: Manhole Lids/Inserts

STANDARD NO. PUB-13

I/I CONTROL MEASURE ISSUE:
Older style manhole covers may contain numerous pick holes that allow inflow into the collection system during storm events. Old and new manhole covers are both susceptible to inflow through or around the cover if water ponds over the cover. Eliminating this source of inflow will reduce excess flow from entering the system. Replacing the cover with a new cover will reduce or eliminate this source of inflow.

STANDARD

- Manhole covers that have been identified through an SSES as being susceptible to inflow may be replaced with a gasketed solid cover or just the ring or cover may be replaced if it is determined to be the source of the problem.
- In lieu of replacing the cover a manhole insert may be installed under the existing cover to eliminate or reduce the volume of inflow that enters the sewer. Manhole inserts are metal or plastic pans installed just under the manhole cover and are supported by the manhole ring. All materials used in the manufacture of manhole inserts shall be plastic or stainless steel in accordance with Standard Detail MH-3.

POTENTIAL LOCAL AGENCY IMPACTS

- Replacement of the entire manhole ring and cover assembly will be costly.
- Installation will be disruptive to traffic if the manhole is located in a street.
- Solid, gasketed covers cost approximately $100 more than conventional covers with pick holes.

POTENTIAL KING COUNTY IMPACTS

- Replacement of the entire manhole ring and cover assembly will be costly.
- Installation will be disruptive to traffic if the manhole is located in a street.
- Solid, gasketed covers cost approximately $100 more than conventional covers with pick holes.

POTENTIAL PRIVATE PROPERTY/RATEPAYER IMPACTS

- Possibly traffic inconveniences during the ring and cover replacement.

I/I CONTROL STANDARD TITLE: Root Intrusion

STANDARD NO. PUB-14

I/I CONTROL MEASURE ISSUE:
Pipelines that have roots protruding in the pipe have a breach in the piping system at a joint and/or a break in the pipe. This breach is a potential source for infiltration. Cutting of the roots inside the pipe and treatment with a root-inhibiting chemical will not remove infiltration. Root intrusion can cause operational problems by plugging the sewer and will likely need to be corrected to address this problem.

STANDARD

- When roots are found in sewer piping and manholes, the point of entry shall be located by CCTV. If infiltration occurs at the point of root intrusion it shall be evaluated for removal during the wet season when surrounding soils are fully saturated. Correction of infiltration caused by roots can be accomplished by performing a spot repair by either a conventional dig and repair or using a trenchless repair method.
- If the segment of sewer indicates potential for additional root intrusion, consideration shall be given to replacing the sewer using either dig and replace or trenchless methods.

POTENTIAL LOCAL AGENCY IMPACTS

- Added cost to test and repair the entire section of main from manhole-to-manhole.

POTENTIAL KING COUNTY IMPACTS

- No impact, since root intrusion is not usually a problem on King County interceptor sewers.

POTENTIAL PRIVATE PROPERTY/RATEPAYER IMPACTS

- Added cost due to increased cost to maintain system.
- Cost savings or reduction in rate increase due to less I&I treatment costs.

I/I CONTROL STANDARD TITLE: Pipeline Leak Testing

STANDARD NO. PUB-15

I/I CONTROL MEASURE ISSUE:
Several aspects of sewer main pipe installation, if not properly designed and constructed, may result in infiltration entering the finished pipeline. Leakage testing of the assembled sewer pipeline immediately following construction is one of the final opportunities for verification that the pipeline meets acceptable I/I criteria prior to being placed into service.

Leakage testing of newly installed replacement sewer mains may not be feasible because active side sewers are being installed on the new line as construction progresses. For these cases, CCTV inspection of the completed line will be required in lieu of a leakage test.

STANDARD

- Acceptance criteria for substantial completion following construction of new and rehabilitated pipelines shall include testing requirements to ensure that the sewer pipelines and connections to the sewer pipelines, as constructed, meet specified leakage limitations. Where new sewer mains can be isolated from active flow, the pipeline shall be tested by either a water test or a low pressure air test. For those cases where flow cannot be routed around the new main, the pipeline shall be CCTV inspected for leakage.
- The water test shall be an infiltration test if the sewer main is installed below the groundwater level. The water test shall be an exfiltration test if the sewer main is installed above the groundwater level. Testing shall be in accordance with the WSDOT/APWA Standard Specifications.
- Low pressure air testing shall conform to the requirements of the WSDOT/APWA Standard Specifications.
- Where wastewater flow cannot be routed around the new main as construction progresses, the pipeline shall be CCTV inspected for leakage. While under warranty, it is recommended that a visual inspection for leakage be performed during the wet season when surrounding soils are fully saturated.

POTENTIAL LOCAL AGENCY IMPACTS

- Possible additional cost and additional staffing requirements for acceptance and inspection verification.

POTENTIAL KING COUNTY IMPACTS

- Possible additional cost and additional staffing requirements for acceptance and inspection verification.

POTENTIAL PRIVATE PROPERTY/RATEPAYER IMPACTS

- Potentially higher ratepayer costs for increased visual inspection/verification requirements.

I/I CONTROL STANDARD TITLE: Manhole Leak Inspection

STANDARD NO. PUB-16

I/I CONTROL MEASURE ISSUE:
Several aspects of sewer manhole installation, if not properly designed and constructed, may result in infiltration entering the finished sewer system. Leakage inspection of the assembled manhole during the first wet season following construction is the best opportunity for verification that the manhole meets acceptable I/I criteria prior to being placed into service.
A final visual inspection for manhole leakage to confirm that as-built conditions have not degraded due to material failures, bedding or backfill settlement, or other causes needs to be performed at the end of the warranty period.

STANDARD

- Acceptance criteria following construction on new and rehabilitated manholes shall include a visual inspection to ensure that the manholes and connections to the manholes, as constructed, are watertight. Groundwater level shall be allowed to return to its normal elevation before performing the inspection. It is recommended that the visual inspection for manhole leakage be performed during the wet season when surrounding soils are fully saturated.

POTENTIAL LOCAL AGENCY IMPACTS

- Possible additional cost and additional staffing requirements for visual inspections.

POTENTIAL KING COUNTY IMPACTS

- Possible additional cost and additional staffing requirements for visual inspections.

POTENTIAL PRIVATE PROPERTY/RATEPAYER IMPACTS

- Potentially higher ratepayer costs for increased inspection requirements.

I/I CONTROL STANDARD TITLE: CCTV Inspection

STANDARD NO. PUB-17

I/I CONTROL MEASURE ISSUE:
Television inspection of newly installed and rehabilitated sewers provides documentation of lateral connections, confirms pipe joints are properly pushed home, and identifies infiltration and internal defects.

STANDARD

- A complete, televised inspection of sewer pipe shall be performed on newly installed and rehabilitated sewers. An audio-visual tape recording of the inspection, compatible with the Local Agency's existing audio-visual format, shall be retained by the Local Agency. A complete television inspection of newly installed and rehabilitated sewer laterals shall be performed where the lateral cannot be pressure tested. The CCTV inspection of the lateral shall include all portions of the lateral installed or rehabilitated on the project. If camera access through a lateral test wye cannot be provided, the video camera equipment shall have a separate side-casting camera that allows inspection of the lateral. The television inspection shall be conducted following trench backfill and compaction, cleaning and testing. Groundwater level shall be allowed to return to its normal elevation before performing the inspection.

POTENTIAL LOCAL AGENCY IMPACTS

- Additional camera equipment to inspect laterals may be required by agencies that perform their own CCTV inspection of new construction.
- Additional inspection time to examine lateral construction may be required for those agencies performing their own CCTV inspection of new construction.
- A slight increase in construction costs will result for agencies that currently do not require the contractor to perform the CCTV inspections of laterals.

POTENTIAL KING COUNTY IMPACTS

- No impact since King County normally performs CCTV inspection of new and rehabilitated mains and does not normally allow lateral connections to their trunk sewers.

POTENTIAL PRIVATE PROPERTY/RATEPAYER IMPACTS

- Television inspection of the lateral insures there are no internal defects, potentially reducing future private property owner maintenance requirements due to improper installation.
- Potentially higher ratepayer costs for increased CCTV inspection requirements.

I/I CONTROL STANDARD TITLE: Inspection of Pipe Installation and Backfill

STANDARD NO. PUB-18

I/I CONTROL MEASURE ISSUE:
Inspection of pipe and bedding materials; foundation conditions; and pipe laying, bedding and backfill operations is necessary to ensure conformance with the required standards. A visual inspection of connections to the new main line should be performed to verify that no disallowed connections, such as from storm water collection sources, are being made to the system. Without adequate inspection, contractors may take construction shortcuts that result in a substandard pipeline installation.

STANDARD

- The Local Agency shall perform the following inspection activities on pipeline installations:
  - Inspection of foundation conditions in areas of questionable soils to verify whether over-excavation is required.
  - Visual inspection of pipe materials and bedding and backfill materials for conformance with standards.
  - Measurement of compaction and density for conformance with bedding and backfill standards.
  - Visual inspection of pipe laying operations to ensure pipe has full, uniform support, pipe-jointing process is being properly performed, and compaction operations are not damaging the pipe.
  - Visual inspection of service connections to the mainline and manholes to verify no surface water collection sources are being connected to the sanitary sewer system.
- A minimum of 10% of the pipe length should be inspected as noted above. Above and beyond the minimum inspection, the Local Agency shall make the determination on the required frequency of the inspection based on the qualifications and quality of the contractor performing the work.

POTENTIAL LOCAL AGENCY IMPACTS

- Agency will need the inspection resources to adequately cover sewer construction work occurring within the agency.
- The following Local Agency inspection items should be performed for all pipeline installations:
  - Inspection of foundation conditions in areas of questionable soils to verify whether over-excavation is required.
  - Visual inspection of pipe materials and bedding and backfill materials for conformance with standards.
  - Conformance with compaction and density standards for bedding and backfill.
  - Visual inspection of pipe laying operations to ensure pipe has full, uniform support, pipe jointing process is being properly performed and compaction operations are not damaging the pipe.
  - Visual inspection of service connections to the mainline and manholes to verify no surface water collection sources are being connected to the sanitary sewer system.
- Administrative costs for on-site inspection will increase for those agencies that are not currently inspecting pipe installation and backfill operations.
- Inspection of pipe installation and backfill operations insures installation according to the standards, resulting in a more long-lasting and dependable facility. In the long-term, proper inspection of critical pipeline installation operations can save future maintenance, rehabilitation and replacement costs.

POTENTIAL KING COUNTY IMPACTS

- No impact. King County currently provides full time inspection on all construction projects.

POTENTIAL PRIVATE PROPERTY/RATEPAYER IMPACTS

- Potential higher ratepayer costs in those agencies where inspection is not currently being performed.

I/I CONTROL STANDARD TITLE: Product Specific Inspection

STANDARD NO. PUB-19

I/I CONTROL MEASURE ISSUE:
Products used in sewer system construction for both new and rehabilitation improvements can fail and lead to I/I due to improper installation and/or the use of non-specified products being installed. Without inspection, there are no assurances the product installed is the one specified and was installed properly.

STANDARD

- Product inspection is the visual verification of product test results and/or confirmation that an approved product is the one being installed, and the sequence of construction or application is appropriate. Verify the approved product is being installed in accordance with approved specifications. This includes pipe, fittings, bedding, and rehabilitation products. It is important to distinguish the difference between inspection and testing. Those products covered under the testing standard shall have those tests performed to verify compliance.
- Pipe shall be inspected at the point of installation to verify that it has factory markings identifying the type and class of pipe. Unlabeled products will not be approved for installation.
- Pipe fittings shall be inspected at the point of installation to confirm they meet the specifications.
- Pipe bedding material shall be inspected at the time of installation to be appropriate for the type of pipe (flexible or rigid).
- For rehabilitation products, the manufacturer's recommended installation procedure shall be reviewed prior to installation. An installation list with references shall be provided documenting recent projects where the product has been installed. Contact references and document the installation and operational experiences with the product. Conduct any additional investigations determined necessary for approval of the product and installation. If through this review the product appears acceptable, the installation requirements shall be documented from the review process along with any testing requirements of the installation.

POTENTIAL LOCAL AGENCY IMPACTS

- Added cost for increased inspection.
- Additional qualification investigation for proposed rehabilitation products.

POTENTIAL KING COUNTY IMPACTS

- No impact, since King County already doing full time inspection.

POTENTIAL PRIVATE PROPERTY/RATEPAYER IMPACTS

- Potentially higher ratepayer costs in agencies where product specific inspection is currently not being performed.

I/I CONTROL GUIDELINE TITLE: Certification, Warranty and Qualifications

GUIDELINE NO. PUB-20

I/I CONTROL MEASURE ISSUE:

Some new construction and/or rehabilitation products or application systems may not have a proven track record of performance, yet offer attractive benefits or low costs which merit their use. A product specific certification can be used to protect the Local Agency's investment.

Every construction or rehabilitation project requires a period within which defects in construction or materials should be allowed to become evident before the contractor, supplier or manufacturer ceases to have responsibility for the project. A stipulated warranty length can be used to protect the Local Agency's investment. Conventional construction products and methods should be warranted for a period of at least one year. Unconventional or newer products and methods could be warranted for a longer period, from 2 to 5 years, as determined by the Local Agency's Engineer.

A formal procedure for qualifying a manufacturer or contractor can be used to protect the Local Agency's investment. Qualifications information to be supplied during bidding may include a summary of the firm's history, itemization of a number of recent, similar projects with descriptions, amounts, names and experience of specific firm representatives, and names/phone numbers of owner references.

It is vital that the certification, warranty and qualification requirements and procedures be fully described in the contract documents to be enforceable with the contractors and suppliers.

GUIDELINE

- When a new construction and/or rehabilitation product or application system does not have a documented record of comparable prior successful installations, the supplier of the product or system shall be required to provide certification that the product or system will perform as specified.
- The certification shall provide for the complete replacement of the product or system by the contractor if the product or system is found to be defective when installed or applied by a certified agent of the manufacturer.
- Each new construction and/or rehabilitation project shall include a warranty period of at least one year. Longer periods may be stipulated as determined by the Local Agency based on the nature of the work.
- Testing requirements at the end of the warranty period shall be consistent with those used to determine initial project acceptance.
- The Local Agency may determine that specific qualifications for the manufacturer or contractor be included in the evaluation of bids received.

POTENTIAL LOCAL AGENCY IMPACTS

- Staff or consultant Engineer will need to spend time to research and develop a certification period as well as a means for determining compliance.
- Verification of certification requirements during the submittal process will be required.
- Inspection during construction to monitor installation/application will increase staffing requirements.
- Follow-up time by staff to monitor product or system performance may delay project completion and may increase staff requirements.
- Potential for additional project cost by manufacturer or contractor.
- Staff or consultant Engineer needs to determine appropriate qualification procedures.
- Staff or consultant Engineer needs to determine appropriate length of warranty period.
- Legal and engineering effort to establish acceptable pre-qualification requirements will be greater.
- Time needed to determine qualification information during bid evaluation period will be longer.

- There is potential for increased bid prices.
- Additional engineering and legal costs during design and bid periods are likely to occur.

POTENTIAL KING COUNTY IMPACTS

- Staff or consultant Engineer will need to spend time to research and develop a certification period as well as a means for determining compliance.
- Verification of certification requirements during the submittal process will be required.
- Inspection during construction to monitor installation/application will increase staffing requirements.
- Follow-up time by staff to monitor product or system performance may delay project completion and may increase staff requirements.
- Potential for additional project cost by manufacturer or contractor.
- Staff or consultant Engineer needs to determine appropriate qualification procedures.
- Staff or consultant Engineer needs to determine appropriate length of warranty period.
- Legal and engineering effort to establish acceptable pre-qualification requirements will be greater.
- Time needed to determine qualification information during bid evaluation period will be longer.
- There is potential for increased bid prices.
- Additional engineering and legal costs during design and bid periods are likely to occur.

POTENTIAL PRIVATE PROPERTY/RATEPAYER IMPACTS

- Potentially higher ratepayer costs for certifications and longer warranty periods.

I/I CONTROL GUIDELINE TITLE: Pipe Protection-Depth of Cover

GUIDELINE NO. PRV-1

I/I CONTROL MEASURE ISSUE:
Shallow buried flexible pipe is susceptible to damage from heavy live loads and construction loads. Deeply buried flexible pipe is susceptible to damage from heavy soil loading. Pipe type, class, and the quality of the pipe bedding installation are especially important for flexible pipe buried less than 3 feet deep and greater than 15 feet deep beneath a general fill. Standard industry practice based on load testing, engineering analysis and field experience is to maintain a minimum cover over flexible pipe of 3 feet to avoid damage from heavy live loads and construction loads. Burial depths greater than 15 feet create soil loading conditions that exceed the capacity of flexible pipe unless extremely careful attention is paid to pipe bedding installation.

GUIDELINE

- Depth of cover over flexible pipe shall be 3 feet minimum and 15 feet maximum. Where the depth of cover over a pipe is less than 3 feet or exceeds 15 feet, follow pipe manufacturer's recommendations for pipe material type and class, pipe installation procedures, bedding and backfill.
- Testing and inspection: Full time inspection of pipe bedding operation should be performed on flexible pipe installations over 15 feet.

POTENTIAL LOCAL AGENCY IMPACTS

- Inspection of bedding operations to ensure proper installation is especially critical for deeply buried flexible pipe.
- Inspection costs would go up for those agencies that are currently not continuously inspecting bedding placement for deeply buried flexible pipe.
- Review of supporting calculations would be required when flexible pipe is used for installations over 15 feet.

POTENTIAL KING COUNTY IMPACTS

- No impact since King County does not normally allow side sewer connections to its conveyance system.

POTENTIAL PRIVATE PROPERTY/RATEPAYER IMPACTS

- Construction costs for deeply buried pipe may increase moderately, thus increasing costs to ratepayers, in those agencies that presently allow installation of flexible side sewer pipe at depths over 15 feet without an engineering analysis.

I/I CONTROL STANDARD TITLE: Allowable Connections to Side Sewers

STANDARD NO. PRV-2

I/I CONTROL MEASURE ISSUE:
Description of allowable and disallowable connections to side sewers for the purpose of eliminating clean surface and subsurface drainage flow to the public separate sewer systems discharging to the King County regional conveyance system.

STANDARD

- Side sewers discharging to separated sewer systems shall convey sanitary sewage only. Sanitary sewage sources are limited to:
  - Building plumbing outlets.
  - Sump Pumps conveying sanitary sewage.
- Sources of clean water flow shall not be conveyed by side sewers discharging to a separate sewer system, including:
  - Downspouts.
  - Foundation drains.
  - Catch basins.
  - Storm water inlets and trench drains.
  - Structure or landscaping under-drain systems.
  - Sump pumps discharging surface runoff or subsurface drainage flow.

POTENTIAL LOCAL AGENCY IMPACTS

- Allowable connections to side sewers shall be in conformance with applicable plumbing codes.
- Newly developing building sites will be required to establish separate surface and sub surface drainage systems compatible with the developed site grading, soil conditions, groundwater table, and adjacent environmentally sensitive areas. Comprehensive monitoring for disallowable side sewer connections will be required, particularly where alternate disposal requirements for drainage are onerous to the property owner.
- It is expected that some existing building sites will be found to be discharging clean water to the side sewer, either as a result of partial failure of side sewers, or as a result of illicit connections. When implementing corrective measures for these sites, consideration must be given to disposition of the resulting displaced flows. New site drainage systems implemented for this purpose must be compatible with the developed site grading, soil conditions, groundwater table, and adjacent environmentally sensitive areas.
- Requirements for newly developing sites are consistent with most current development regulations and should not result in development costs above and beyond current requirements.
- Repair of failed side sewers will result in varying levels of cost on a per site basis. Incremental cost impacts will be associated with the following factors:
  - Side sewer length.
  - Site development features (i.e. structures, landscaping, pavement, etc.).
  - Site accessibility (i.e. slope, overgrowth, sensitive areas, etc.).
- Disconnection of clean water sources from side sewers on developed sites will result in varying levels of cost on a per site basis. Incremental cost impacts will be associated with the following factors:
  - Distance to alternative discharge point for clean water flows.
  - Presence of environmentally sensitive areas.
  - Relative elevation of property to alternative discharge point.
  - Ground water elevation.
  - Site elevation relative to surrounding areas.
  - Proportion of impermeable area on the site.

- Testing to determine the presence of failed side sewer conditions that might allow clean water to enter the system cannot be comprehensively achieved except during wet weather conditions that result in saturated ground conditions. Testing for this purpose is best achieved on a basin wide basis through flow monitoring and analysis, or potentially through television inspection.
- Testing for illicit downspout connections and certain area drain connections can be achieved, under favorable conditions, through smoke testing. Some illicit connections of surface or subsurface drainage will not be detected through smoke testing, but might be detectable using dye testing.
- Generally, basin wide testing for illicit connections is implemented prior to the implementation phase to determine where remedial actions may be required. Site specific testing during implementation of the remedial work may be helpful in determining the effectiveness and completeness of the work being undertaken.

POTENTIAL KING COUNTY IMPACTS

-

POTENTIAL PRIVATE PROPERTY/RATEPAYER IMPACTS

-

I/I CONTROL GUIDELINE TITLE: Pipe Zone Bedding and Trench Backfill

GUIDELINE NO. PRV-3

I/I CONTROL MEASURE ISSUE:
Side sewers not laid in granular bedding material are subject to potential point loading and/or deflection over time leading to subsequent damage to the pipe or pipe joint.

GUIDELINE

- Side sewer/lateral pipe zone bedding material shall provide uniform support along the entire pipe barrel, without load concentration at joint collars or bells. Bedding material shall be granular material meeting the requirements of Standard Detail S-1. The installed pipe zone bedding material shall effectively separate the side sewer from contact with the native ground and any rocks, pebbles, roots, or other materials that might impose a point load on the side sewer. The pipe zone bedding material shall extend a minimum of 4 inches beyond the outside dimension of the side sewer pipe in all directions. All adjustments to line and grade shall be made by scraping away bedding material or filling with bedding material under the body of the pipe and not be accomplished by blocking or wedging. Disturbed bedding shall be reconsolidated prior to backfill. Pipe zone bedding material shall be compacted to 95 percent maximum density per ASTM D-1557. Bedding shall be placed, spread, and compacted before the pipe is installed so that the pipe is uniformly supported along the barrel. Material shall be worked carefully under and around the pipe haunches and then compacted.
- Deviation from the installation requirements noted above is acceptable where written recommendations have been provided by the pipe manufacturer.

POTENTIAL LOCAL AGENCY IMPACTS

- Site inspection of side sewer bedding and backfill material and installation will be required to insure that requirements are met. Local Agency may be sewer agency or building department.
- Additional inspection and review time would be required for those Local Agencies not currently inspecting side sewer installations and reviewing material submittals.

POTENTIAL KING COUNTY IMPACTS

- No impact, since King County does not allow side sewer connection to its conveyance system.

POTENTIAL PRIVATE PROPERTY/RATEPAYER IMPACTS

- Potentially higher costs if builder/developer does not now use good practices in installing side sewers.
- Potentially higher permit costs for inspections and testing.

I/I CONTROL GUIDELINE TITLE: Pipe Materials

GUIDELINE NO. PRV-4

I/I CONTROL MEASURE ISSUE:
Pipe breakage and joint failures may occur because of improperly selected side sewer/lateral pipe materials and/or installation procedures, resulting in infiltration. Proper selection of pipe materials and joint systems is an important component of side sewer design and construction that will result in reduced immediate and future infiltration.

GUIDELINE

- Side sewer/lateral pipe materials shall be selected based on external loading and soil corrosion potential. Pipe materials used shall have strength characteristics consistent with the earth load and surcharge conditions anticipated. Vehicle live loads, overburden, soil characteristics, and slope conditions shall be considered. Side sewers shall be installed below the frost line and at a depth consistent with the published load bearing capacity of the pipe material used. Pipe materials used shall have corrosion resistant characteristics consistent with the corrositivity of the environment in which they are to be installed.
- Side sewer/lateral pipe materials shall employ gasketed joints and standard manufactured fittings designed for use with the pipe material installed. Deflection of joints shall be limited to 80% of the published maximum deflection for the gasketed joint. Flexible pipe materials used shall be properly bedded and backfilled to ensure that deflection of the pipe beyond its structural capacity will not occur and that deflection "out of round" beyond the capability of the pipe joints to remain sealed does not occur.
- Connection between the side sewer/lateral and dissimilar building plumbing piping shall be accomplished using approved flexible water tight couplings specifically designed for the pipe materials joined. Butt joints wrapped and/or encased in concrete or mortar joint will not be allowed. Connection of pressure discharges from building plumbing to gravity side sewers/laterals shall be accomplished using standard pressure fittings and shall be anchored to ensure against movement during pressurization cycles.

POTENTIAL LOCAL AGENCY IMPACTS

- Site inspection of side sewer/lateral material and joint installation insuring requirements are met. Local Agency may be sewer agency or building department.
- Additional inspection and review time would be required for those Local Agencies not currently inspecting side sewer installations and reviewing material submittals.
- Integrity of the installed pipe material and joints must be determined through water, air, or vacuum testing (see testing standards). Testing to confirm integrity of side sewers/laterals should be required prior to acceptance of the installation following construction and following a one-year warranty period.

POTENTIAL KING COUNTY IMPACTS

- No impact, since King County does not normally allow side sewer connection to its conveyance system.

POTENTIAL PRIVATE PROPERTY/RATEPAYER IMPACTS

- May be added costs to property owner/developers if their practices change due to standards for pipe material and joint systems being more strictly enforced.

I/I CONTROL STANDARD TITLE: Inspection Wyes/Cleanouts

STANDARD NO. PRV-5

I/I CONTROL MEASURE ISSUE:
Pipe breakage and joint failures may occur during the service life of a side sewer pipe, resulting in infiltration. Installation of inspection wyes/cleanouts at the upstream end of the side sewer allows for the future preparation and inspection of side sewer to identify infiltration problems and their specific sources.

STANDARD

- An inspection wye/cleanout shall be installed in each new and rehabilitated side sewer immediately down stream of the connection between the building plumbing outlet and the side sewer per Standard Detail SS-1. The inspection wye/cleanout shall meet the requirements of Standard Detail SS-4. Inspection wyes/cleanouts shall be installed no less than 2 feet and no more than 5 feet beyond the face of the building for new side sewer installations. For rehabilitation projects, the inspection wye/cleanout shall be located within 2 feet of the termination of the rehabilitation. Inspection wyes/cleanouts shall be located, to the greatest extent possible, to ensure CCTV accessibility in the future throughout the entire side sewer.
- When any work is done to rehabilitate a side sewer that involves excavating to expose and gain entry to the pipe outside of an existing inspection wye/cleanout, the entire side sewer from the property line to the building(s) must be upgraded to meet this standard.
- Connection of inspection wye/cleanout assemblies to the existing pipe system shall be made with an approved rubber gasketed pipe coupling.

POTENTIAL LOCAL AGENCY IMPACTS

- Inspection of inspection wye/cleanout installations to ensure that requirements are met. Local Agency may be sewer agency or building department. Documentation and record keeping to facilitate future location and use of the inspection wyes/cleanouts.
- Property access issues allowing use of inspection wyes/cleanouts by the Local Agency and/or the sewer agency to assess condition of the side sewer/lateral in the future. May require side sewer permit/utility ordinance clause modifications.
- Additional administrative costs to initially record and maintain records of inspection wye/cleanout locations.
- Additional costs associated with permit language and/or ordinance modifications required to establish legal right for Local Agency to access inspection wyes/cleanouts on private property.
- Additional cost associated with ongoing program of periodic monitoring of side sewer integrity and performance using the inspection wyes/cleanouts.
- Inspection wye/cleanout testing will be accomplished integrally with the side sewer/lateral test.

POTENTIAL KING COUNTY IMPACTS

- No impact, since King County does not normally allow side sewer connections to its conveyance system.

POTENTIAL PRIVATE PROPERTY/RATEPAYER IMPACTS

- Increased costs for added fittings and installation requirements, as well as inspections where standard requirements exceed current requirements
- Restrictions on development and landscaping required to maintain accessibility to inspection wye/cleanout in the future.

I/I CONTROL GUIDELINE TITLE: Lateral and Side Sewer Rehabilitation Methods

GUIDELINE NO. PRV-6

I/I CONTROL MEASURE ISSUE:
Once the decision has been made to rehabilitate laterals or side sewers to control I/I, several alternatives may be used to replace or rehabilitate the pipe. These include trenchless rehabilitation techniques such as cure-in-place lining, pipe bursting and conventional dig and replace. An evaluation should be made to determine suitability (technical and cost effectiveness) of trenchless methods versus conventional dig and replacement of the sewer. The technical evaluation should assess specific issues such as the sewer location and length, alignment, condition of the pipe being replaced, assessment of the surface features that would be disturbed by construction, and the degree of root intrusion in the existing lines. The alternative pipe rehabilitation methods that should be considered include:

Pipe bursting is a trenchless pipeline rehabilitation method that can be used to replace side sewer pipes. Reduction of excess flow is achieved by eliminating sources of infiltration in the piping being replaced. Illicit connections are eliminated by removing the connection to the side sewer. It is possible to increase the size of the pipe; however, site specific constraints may limit the ability to increase the size. Using pipe bursting to replace a pipe may be restricted depending upon adjacent utilities, proximity to surface improvements, the type of existing pipe being replaced, and soil conditions. There are a number of variations on pipe bursting, such as pneumatic, hydraulic expansion, and static pull systems. All of these displace the old pipe into the adjacent ground and pull a new pipe in to replace the old pipe. There are also related processes such as pipe reaming, which is a variation of horizontal directional drilling, where pieces of the old pipe are removed rather than pushing them into the adjacent soil. The most common pipe material used is HDPE, but other types of pipe material such as cast iron, MDPE, and ABS can be used for the replacement pipe. Pipe bursting of side sewers will require excavation of at least two pits for insertion and pulling. Generally, pipe bursting is suitable for straight sections. If there are buried bends on the side sewer it may require additional pits to be excavated for installation of the replacement pipe.

Cure-in-place pipe (CIPP) liner is a trenchless pipeline rehabilitation method that can be used to repair existing side sewer pipes. Reduction of excess flow is achieved by eliminating sources of infiltration in the piping being rehabilitated. CIPP liner involves inverting an epoxy-resin-impregnated flexible tube into an existing line using hydrostatic head. The resin is then cured using heat to produce a pipe inside the existing side sewer. The outside diameter of the replacement pipe is smaller than the existing pipe to allow the system to be installed. Capacity in the pipeline will be reduced because of the reduction in pipe size.

Fold and form lining is a trenchless pipeline rehabilitation method that can be used to repair existing side sewer pipes. Reduction of excess flow is achieved by eliminating sources of infiltration in the piping being replaced. The fold-and-form process involves inserting a heated PVC or HDPE thermoplastic liner, folded or deformed into a U-shape, into an existing side sewer and re-rounding the liner using heat and pressure to produce a pipe inside the existing pipe. The outside diameter of the replacement pipe is smaller than the existing pipe to allow the system to be installed. Capacity in the pipeline will be reduced because of the reduction in pipe size.

GUIDELINE

- Construction standards for pipe bursting, cure-in-place lining and folded and formed liners shall be as follows:
- Pipe Bursting:
  - Pipe bursting shall meet the requirements of the King County Regional Inflow and Infiltration Control Program Guide Specifications.
- Cure-in-Place Lining:

I/I CONTROL STANDARD TITLE: Product Specific Certification

STANDARD NO. PRV-13

I/I CONTROL MEASURE ISSUE:
Some new construction and/or rehabilitation products or application systems may not have a proven track record of performance, yet offer attractive benefits or low costs which merit their use. The contractor installing the product must also be approved by the supplier as qualified to perform the work. A product specific certification can be used to protect the property owner's investment and the Local Agency's long-term interest.

STANDARD

- When a new construction and/or rehabilitation product or application system does not have a documented record of comparable prior successful installations, the supplier of the product or system shall be required through the building or sewer connection permit process to provide certification that the product or system will perform as specified.
- The contractor installing the rehabilitation product shall be certified by the product manufacturer as being qualified to apply/install the product.
- The certification shall provide for the complete replacement of the product or system by the contractor if the product or system is found to be defective.

POTENTIAL LOCAL AGENCY IMPACTS

- Staff or consultant Engineer will need to spend time to research and develop a certification period as well as a means for determining compliance.
- Inspection during construction to monitor installation/application will increase staffing requirements.
- Follow-up time by staff to monitor product or system performance may delay project completion and may increase staff requirements.
- Potential for additional project cost by manufacturer or contractor.
- Additional engineering cost during design, construction and follow-up will likely be incurred.

POTENTIAL KING COUNTY IMPACTS

- No impact since King County does not normally allow side sewer connections to its collection system.

POTENTIAL PRIVATE PROPERTY/RATEPAYER IMPACTS

- Potentially higher side sewer construction costs for certifications.

I/I CONTROL STANDARD TITLE: Bonding and Warranty Inspection

STANDARD NO. PRV-14

I/I CONTROL MEASURE ISSUE:
One critical element of a warranty is verification of the improvement prior to the end of the warranty period so that construction deficiencies can be accomplished and paid for via the performance bond. Thus the system can be repaired and I/I eliminated.

STANDARD

- A warranty period shall be established on publicly funded projects for each side sewer project, or for each project containing a side sewer construction component. This warranty period shall be a minimum of one year in length.
- All side sewer pipes shall be CCTV inspected after 80% of the warranty period has expired but before the end of the warranty period. Defective portions of the system shall be repaired to meet all applicable I/I standards.
- A written record shall be made by the agency of acceptance of the improvement with the date and results of the inspections and testing. This shall be submitted to Contracting Agency for concurrence prior to release of the performance bond.

POTENTIAL LOCAL AGENCY IMPACTS

- Additional CCTV inspection and enforcement of the warranty.

POTENTIAL KING COUNTY IMPACTS

- Processing time for concurrence to release performance bond.

POTENTIAL PRIVATE PROPERTY/RATEPAYER IMPACTS

- Potential of added costs for inspections and verifications.
- Possible schedule delay to allow for verifications.

MWPAAC Engineering & Planning Subcommittee

FINAL DRAFT

Standard Details

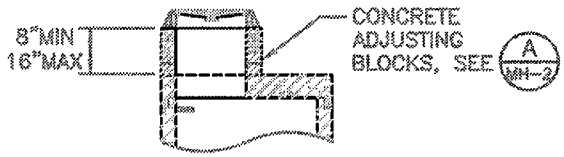

TYPICAL REDUCING SLAB A
SCALE: NTS

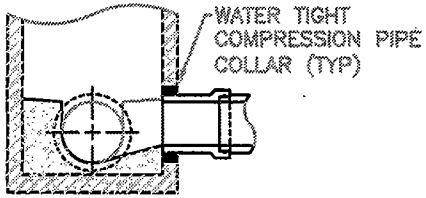

PIPE PENETRATION DETAIL 1
SCALE: NTS

NOTES:

1. JOINT BETWEEN PRECAST RISER AND CAST IN PLACE BASE SLAB SHALL BE WATERTIGHT. SEE D
2. JOINT BETWEEN PRECAST RISER AND PRECAST BASE SHALL BE GASKETED. SEE E
3. PATCH ALL LIFTING HOLES TO PROVIDE WATERTIGHT SEAL.

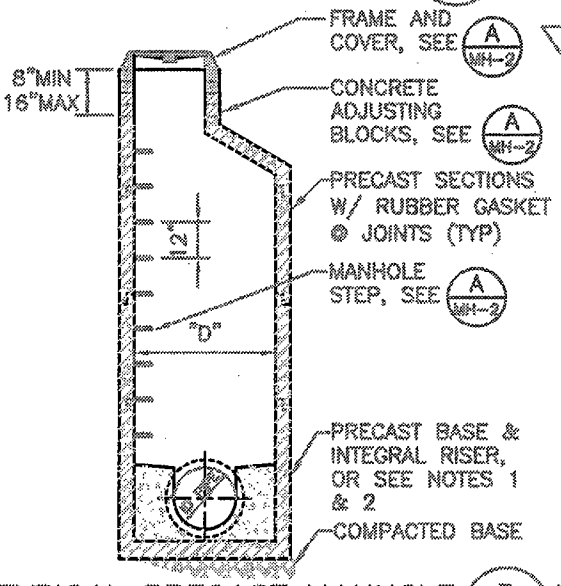

TYPICAL PRECAST MANHOLE B
SCALE: NTS

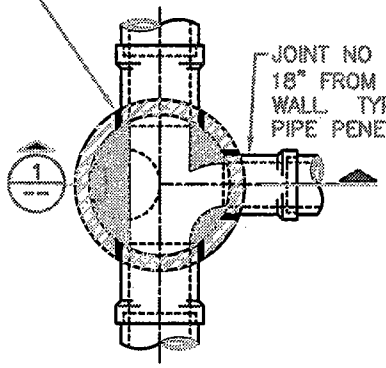

TYPICAL CONNECTION DETAIL C
SCALE: NTS

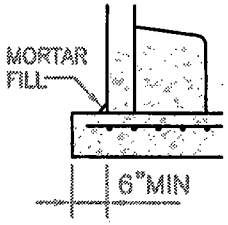

CAST IN PLACE BASE JOINT D
SCALE: NTS

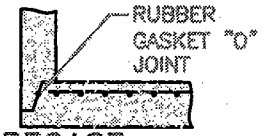

PRECAST BASE JOINT E
SCALE: NTS

THIS STANDARD ADDRESSES SPECIFIC FEATURES IMPACTING I/I CONTROL. SEE STANDARD DETAILS PUBLISHED BY ADMINISTRATIVE AUTHORITY FOR COMPLETE DESIGN REQUIREMENTS

Regional Infiltration/Inflow Control Program	DRAFT	STANDARD I/I CONTROL FEATURES MANHOLES – NEW CONSTRUCTION	DATE: SEP 04 / DRAWN: TSM DWG NO: MH-1

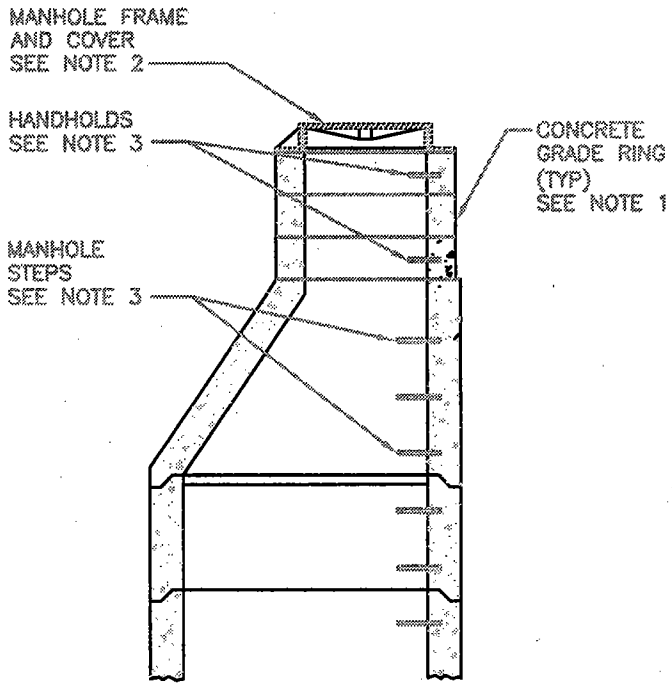

GRADE RINGS, STEPS AND ANCHORS (A)

SCALE: NTS

NOTES:

1. INSTALL CONCRETE GRADE RINGS OF VARIABLE HEIGHT TO ALIGN MANHOLE FRAME AND COVER AT ELEVATION OF PAVEMENT SURFACE ABOVE PRECAST MANHOLE SEGMENTS.
2. LEVELING OF MANHOLE FRAME TO MATCH PAVEMENT SLOPE SHALL BE ACCOMPLISHED THROUGH A SINGLE COURSE OF NONSHRINK GROUT ABOVE THE UPPER CONCRETE GRADE RING AND SHALL MATCH THE FULL WIDTH OF THE GRADE RINGS. SOLID, GASKETED COVERS WITH WATERTIGHT SEAL SHALL BE USED WHEN MANHOLE RIM IS SUBJECT TO SURFACE WATER FLOW OR PONDING.
3. MANHOLE STEPS, HANDHOLES, AND OTHER ANCHOR BOLTS SHALL BE EMBEDDED IN PRECAST UNITS OR INSTALLED WITH CONCRETE ANCHORS. NO STEPS, HANDHOLDS OR ANCHORS SHALL PENETRATE THROUGH THE MANHOLE WALL.

THIS STANDARD ADDRESSES SPECIFIC FEATURES IMPACTING I/I CONTROL. SEE STANDARD DETAILS PUBLISHED BY ADMINISTRATIVE AUTHORITY FOR COMPLETE DESIGN REQUIREMENTS

Regional Infiltration/Inflow Control Program	DRAFT STANDARD I/I CONTROL FEATURES MANHOLES – GRADE RINGS AND STEPS	DATE: SEP 04	DRAWN: TSN
		DWG NO: **MH-2**	

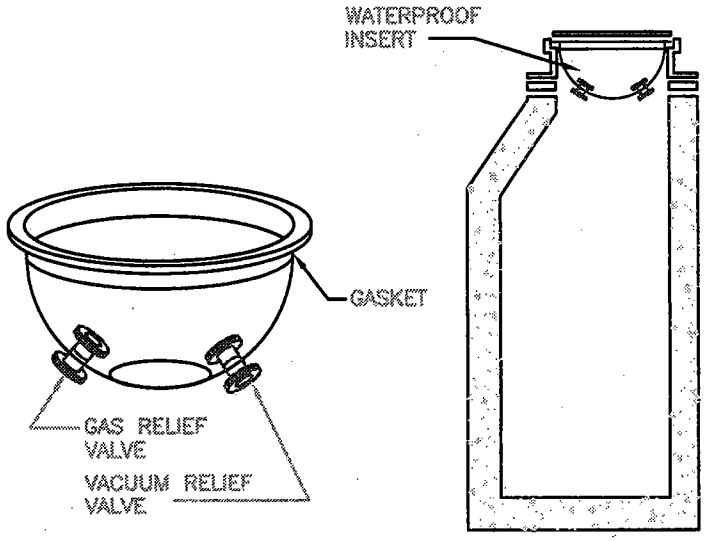

MANHOLE COVER INSERT

SCALE: NTS

A

NOTES:

1. THE INSERT SHALL BE DEEP ENOUGH TO PREVENT THE MANHOLE COVER FROM COMING IN CONTACT WITH THE VALVES WHEN THE MANHOLE COVER IS REMOVED OR INSTALLED.
2. THE INSERT WILL RESTRICT FLOW TO NO MORE THAN 1 GALLON IN 24 HOURS.
3. THE MANHOLE INSERT WILL BE MADE OF NON-CORRODABLE MATERIALS THAT WILL NOT BE DAMAGED BY SEWER GASES OR ROAD OIL.
4. THE GAS RELIEF VALVE AND THE VACUUM RELIEF SHALL BE SELF CLEANING AND BE MADE OF NON-CORRODABLE MATERIALS.
5. THE GAS RELIEF VALVE WILL BE AUTOMATICALLY ACTIVATED AT A PRESSURE DIFFERENTIAL OF APPROX. 2.25 PSI.
6. THE VACUUM RELIEF VALVE WILL BE AUTOMATICALLY ACTIVATED AT A PRESSURE DIFFERENTIAL OF APPROX. 2.25 PSI.
7. A GASKET SHALL BE INSTALLED UNDER THE LIP OF THE INSERT TO INSURE A TIGHT SEAL BETWEEN THE INSERT AND THE MANHOLE FRAME.
8. INSERTS NOT APPROPRIATE FOR USE ON MANHOLES WITH LOCKING COVERS.

THIS STANDARD ADDRESSES SPECIFIC FEATURES IMPACTING I/I CONTROL. SEE STANDARD DETAILS PUBLISHED BY ADMINISTRATIVE AUTHORITY FOR COMPLETE DESIGN REQUIREMENTS

Regional Infiltration/Inflow Control Program	DRAFT	STANDARD I/I CONTROL FEATURES MANHOLE COVER INSERT	DATE: SEP 04 / DRAWING: TBM DWG NO: **MH-3**

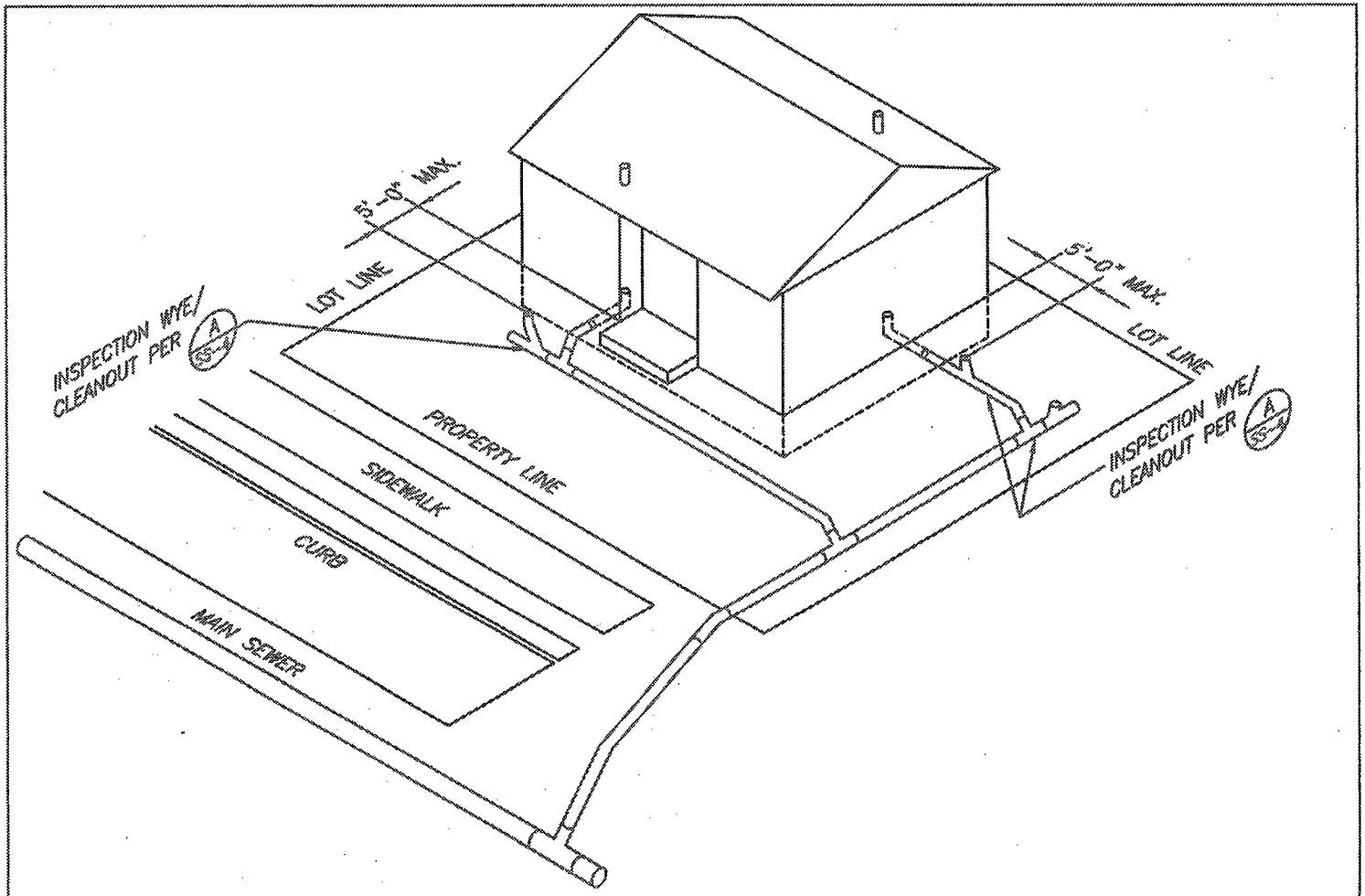

Regional Infiltration/Inflow Control Program	DRAFT	STANDARD I/I CONTROL FEATURES SIDE SEWER INSTALLATION	DATE: SEP 04 DRAWN: TSM DWG NO: SS-1

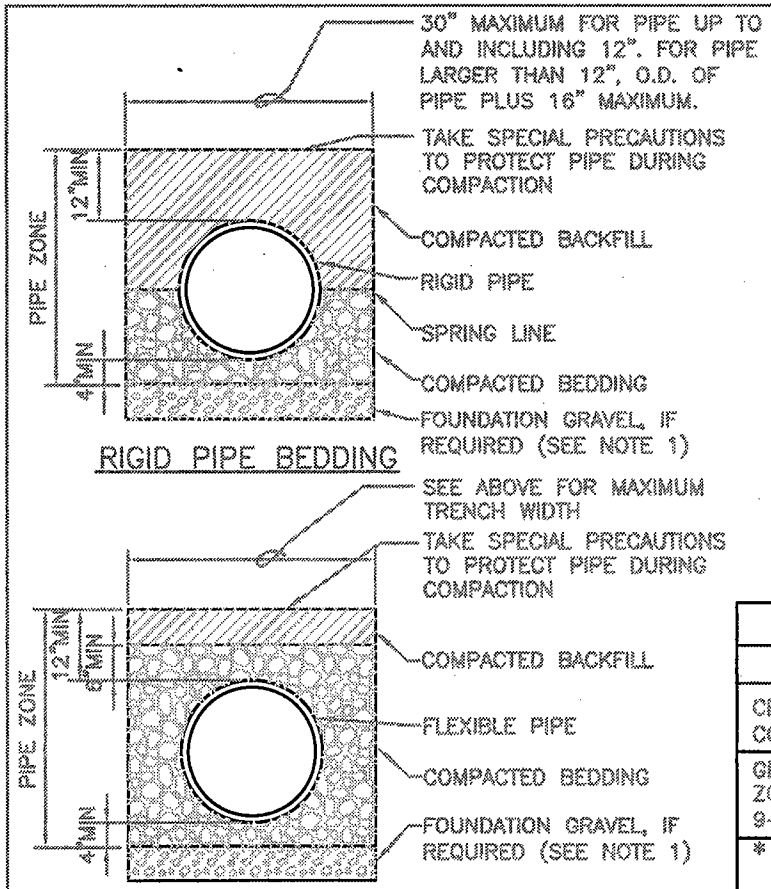

PIPE BEDDING

SCALE: NTS

A

NOTES:

1. EXCAVATE UNSTABLE MATERIAL DOWN TO FIRM SOIL AS DIRECTED BY THE ADMINISTRATIVE AUTHORITY AND REPLACE WITH FOUNDATION MATERIAL PER WSDOT/APWA SECTION 9-03.17 (FOUNDATION MATERIAL CLASS A)

ALLOWABLE BEDDING MATERIALS*	
RIGID PIPE	FLEXIBLE PIPE
CRUSHED SURFACING TOP COURSE, SECTION 9-03.9 (3)	BEDDING MATERIAL FOR THERMO-PLASTIC PIPE, SECTION 9-03.16
GRAVEL BACKFILL FOR PIPE ZONE BEDDING, SECTION 9-03.12(3)	CRUSHED SURFACING TOP COURSE, SECTION 9-03.9(3)
* BEDDING MATERIAL REQUIREMENTS PER WSDOT/APWA STANDARD SPECIFICATIONS.	

"THIS STANDARD ADDRESSES SPECIFIC FEATURES IMPACTING I/I CONTROL. SEE STANDARD DETAILS PUBLISHED BY ADMINISTRATIVE AUTHORITY FOR COMPLETE DESIGN REQUIREMENTS"

Regional Infiltration/Inflow Control Program	DRAFT	STANDARD I/I CONTROL FEATURES SEWER – PIPE ZONE BEDDING	DATE: SEP 04 / DRAWN: JKL / DWG NO: 9-1

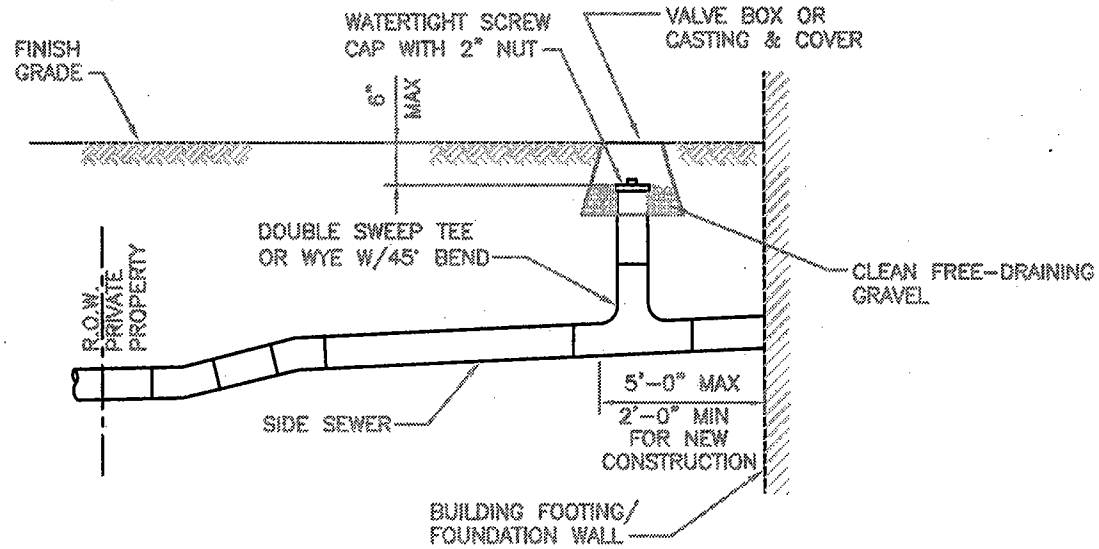

SECTION

SIDE SEWER INSPECTION WYE/CLEANOUT (A)

NOTES:

1. NO DOWNSPOUTS OR STORM DRAINAGE SHALL BE CONNECTED TO THE SANITARY SYSTEM.
2. AS-BUILTS DRAWING SHOWING LOCATION OF SIDE SEWER AND INSPECTION WYE/CLEANOUT IN RELATION TO THE HOUSE AND EXISTING UTILITIES IS REQUIRED AFTER INSTALLATION.
3. A CLEANOUT MAY BE HELD BELOW GRADE IN UNPAVED AREAS A MAXIMUM OF 6". PROVIDE AN 8"x8"x1/4" GALVANIZED STEEL PLATE OVER THE TOP OF BURRIED CLEANOUTS FOR FUTURE LOCATING.
4. IF INSPECTION WYE/CLEANOUT IS WITHIN DRIVING SURFACE, EXTEND CLEANOUT TO GRADE AND PROVIDE AN HS-20 RATED LOAD-BEARING CASTING AND COVER.
5. FOR SIDE SEWER REHABILITATION PROJECTS, LOCATE INSPECTION WYE/CLEANOUT WITHIN 2 FEET OF THE TERMINATION OF THE REHABILITATED PIPE.

THIS STANDARD ADDRESSES SPECIFIC FEATURES IMPACTING I/I CONTROL. SEE STANDARD DETAILS PUBLISHED BY ADMINISTRATIVE AUTHORITY FOR COMPLETE DESIGN REQUIREMENTS

Regional Infiltration/Inflow Control Program	DRAFT STANDARD I/I CONTROL FEATURES SIDE SEWER INSPECTION WYE/CLEANOUT	DATE: SEP 04	DRAWN: TBM
		DWG NO: SS-2	

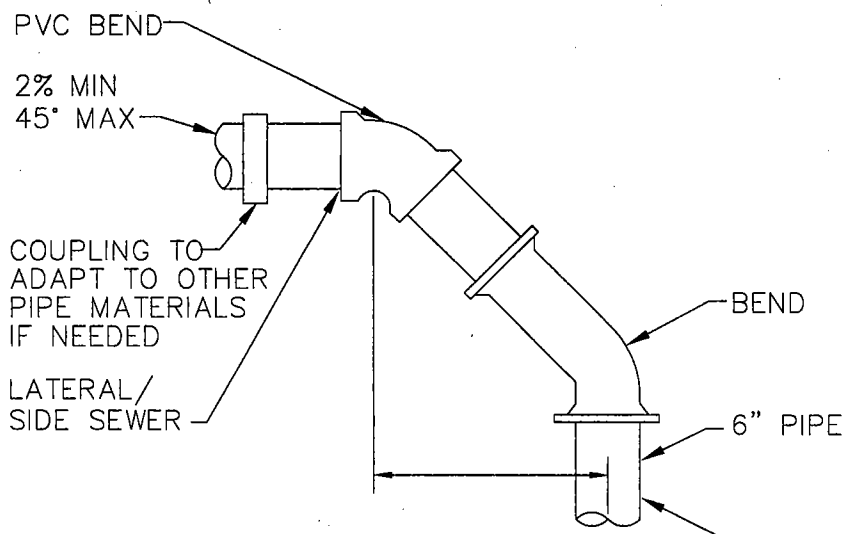

NOTES:

1. PIPE AND FITTINGS SHALL BE PVC PER ASTM D3034 SDR 35
2. PVC TEE INSERTS SHALL BE BY "INSERT A TEE" OR EQUAL AND SHALL INCLUDE RUBBER SLEEVE, PVC ADAPTER HUB AND STAINLESS STEEL BAND. INSERT SHALL BE INSTALLED IN A CORE DRILLED HOLE PER MANUFACTURER'S INSTRUCTIONS. INSERT SHALL BE FLUSH WITH THE INSIDE WALL OF THE MAIN.
3. LOCATE EDGE OF CORE DRILLED HOLE 1'-0" MINIMUM FROM EXISTING PIPE JOINT AND 2'-0" FROM THE EDGE OF ANY EXISTING OR NEW CONNECTIONS.
4. VERTICAL CONNECTION SHALL NOT BE USED UNLESS DEPTH FROM SURFACE TO TOP OF PIPE IS 20'-0" OR GREATER.
5. CONCRETE HAUNCHING IS TO BE CLASS 3000 CONCRETE.

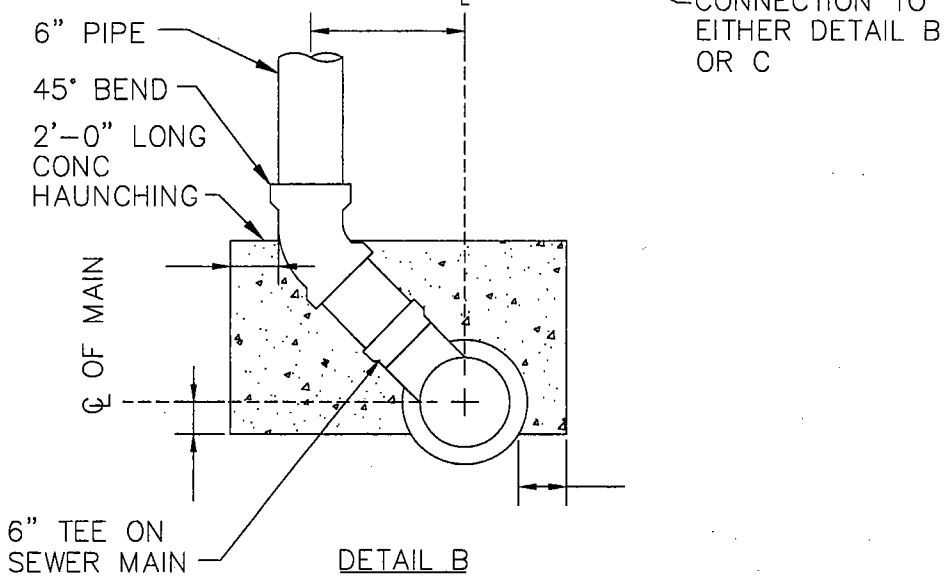

DETAIL B
FOR MAIN 36" DIA OR SMALLER

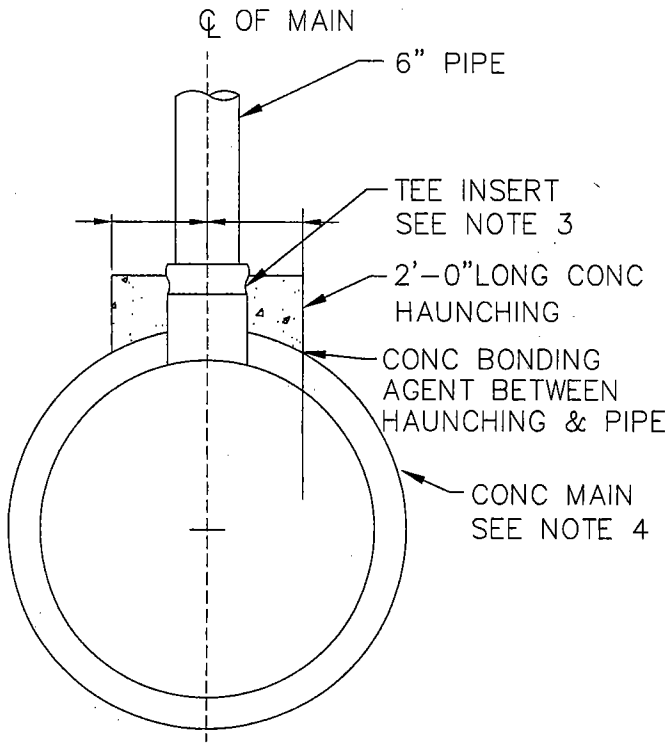

DETAIL C
FOR MAIN 42" DIA OR LARGER

VERTICAL LATERAL/SIDE SEWER CONNECTION

A
--

SCALE: NTS

Regional Infiltration/Inflow Control Program	DRAFT STANDARD I/I CONTROL FEATURES VERTICAL LATERAL/SIDE SEWER CONNECTION	DATE: SEP 04	DRAWN: TSM
		DWG NO: SS-3	

MWPAAC Engineering & Planning Subcommittee

FINAL DRAFT

Policies that Support Standards & Procedures

REGIONAL I/I CONTROL PROGRAM
POLICIES FOR I/I REDUCTION PROJECTS

INTRODUCTION

Selecting effective engineering design standards and procedures also includes selecting policies associated with the application of the standards. Policies are necessary to guide effective I/I removal projects. They form a strong foundation for reducing the amount of infiltration and inflow that enters the public sewerage system, especially for rehabilitation standards and procedures. To that end, this section complements the Design & Engineering section of this document.

This policy section presents a wide range of topics, many of which were first introduced by representatives of Local Agencies during Regional I/I Control Program Workshops. In broad terms, the Policies address the issues of funding, public education, access to private property, inspection, permitting, liability, and storm water drainage. While the Policies include elements of the relationship between King County and the Local Agencies, their primary focus is on the relationship of the Local Agencies to their communities, contractors and customers. The material presents conceptual foundations for regional consensus, consistency and cooperation.

From the original, MWPAAC-accepted working draft of 23 policies (October 21, 2002), the number of policies included in this final draft has been reduced to 15. This reduction involved evaluating the experience gained from the I/I Program pilot projects and combining similar Policies where appropriate.

The Policies were originally separated into those addressing I/I reduction from private properties and those addressing I/I reduction from public properties. It was discovered during the pilot projects that such a division was unnecessary; thus several policies have been combined. The revised draft Policies therefore include Policies that apply to both private and public sewer systems. The Policy revisions are detailed in Appendix B, which includes the original Policies recommended by the E&P Subcommittee, lessons learned and suggestions for combining Policies from the Earth Tech consultant team, the revised Policies proposed by the Earth Tech consultant team in 2004, and the comments and decisions made by the E&P Subcommittee for this final draft document.

The following table lists the final draft Policies as approved by the E & P Subcommittee. These Policies are in support of the Standards and Procedures, are focused on actual I/I Reduction Projects and do not include all policies that will be considered in the Regional I/I Control Program.

Regional I/I Control Program

Summary of Listed Design Standards & Guidelines

Policy #1, Public Funding for I/I Reduction Projects: Public funding should be considered for all phases of I/I mitigation work on privately owned property. Funded work should include scope of work elements such as: permits, investigation, inspection and testing, any modifications to the side sewer connections and laterals, connections to public systems, restoration of disturbed areas (including landscaping, sidewalks, driveways, and rights-of-way) and post-rehabilitation testing and enforcement. Environmentally infeasible &/or prohibitively expensive modifications should be considered for variances/waivers.
Policy #2, Public Awareness of I/I: Educational Materials: King County, in conjunction with the Local Agencies, shall create and promote regional educational programs to introduce the general public to I/I as an issue, to explain the potential benefits from I/I mitigation efforts, and to inform the public of their responsibilities related to the I/I problem. Educational/informational materials shall be designed such that each local jurisdiction will be able to modify them to meet their local needs. Additionally, King County shall function as a central clearinghouse in responding to inquiries about the Regional I/I Control Program.
Policy #3, Public Awareness of I/I: Responsibility for Community: Unless otherwise specified or negotiated in the IGA, for each specific I/I reduction project being led by a Local Agency, the Local Agency shall be responsible for community education/involvement. Unless otherwise specified or negotiated in the IGA, if King County is the Lead Agency, the County shall be responsible for community education/involvement.
Policy #4, Access to Private Property for I/I Reduction and Control: The Local Agency shall pass the necessary ordinances/resolutions and develop the appropriate access agreements that allow each agency or its agents to gain access to private property, such as a right of entry or a construction and inspection easement. These agreements will allow certain actions related to I/I reduction and control, such as conducting a side sewer and/or lateral inspection; construction rehabilitation; or conducting code enforcement activities.
Policy #5, Inspection Training: To promote region-wide consistency, King County in conjunction with the Local Agencies shall provide training opportunities on the I/I Control Program to agency representatives. The training material will include a checklist of guidelines for best practices and the adopted Regional I/I Control Standards, Procedures & Policies.
Policy #6, Limiting Liability: If public resources support any portion of the I/I reduction work on privately owned property, then the Lead Agency shall establish a process to manage and limit its liability. The potential site and in-ground liability issues shall be a part of the I/I planning and design process, including an up-front agreement on when the jurisdiction's liability will begin and end.
Policy #7, Bonding, Licensing, Insurance and Warranty Provisions: The Lead Agency shall be responsible for ensuring that, for publicly funded I/I reduction projects, the construction contract includes appropriate bonding, licensing, insurance, and warranty provisions to ensure satisfactory completion of the project and warranty of the project for a sufficient amount of time (recommended minimum 12 months).
Policy #8, Storm Water Drainage Ordinances: Where I/I work on private or public property results in the diversion of storm water drainage, and there exists a storm water system, then the I/I work shall involve meeting the provisions of the controlling jurisdiction's current "storm water drainage" ordinances. Jurisdictional approval must be obtained.

Policy #9, Responsibility for Storm Water Drainage Where I/I work on private property results in the diversion of storm water and an adequate storm water system does not exist, then the private property owner bears responsibility for discharging the storm water drainage to an appropriate location. Where I/I work on public property results in the diversion of storm water and an adequate storm water system does not exist, the Local Agency or Associated Agency bears the responsibility for discharging the storm water drainage to an appropriate location.
Policy #10, Infeasible and/or Prohibitively Expensive Modifications: Where an I/I reduction project would result in the diversion of storm water drainage, and the modifications required to properly discharge the storm water are deemed to be infeasible &/or prohibitively expensive (for the property owner), consider giving the property owner choice of disconnection of illicit connection or surcharge.
Policy #11, Property Restoration: The Lead Agency shall establish a standard for property restoration before initiating any I/I work (including landscaping, sidewalks, and driveways). Public property restoration is governed by Local Agency or Associated Agency codes or ordinances. Options can include: 1 – "Restoration as near as possible to pre-construction condition" 2 – "Basing value on restoration to as near as possible to pre-construction condition, make up front property owner payment with signed waiver"
Policy #12, Contractor Qualifications: The Lead Agency shall develop in the bid specifications specific minimum experience requirements for contractors to ensure that the contractor hired will have experience in the type of work they are to perform.
Policy #13, Required Permits: The Local Agency should obtain all permits feasible, including the SEPA, HPA, 404, or other State or Federally required permits. The contractor should obtain permits as detailed in the specifications such as the building, road or utility, ROW use, &/or clearing and grading permits. The permits required to be obtained by the contractor should be specifically listed in the bidding documents.
Policy #14, Cooperative Efforts: For all permit needs, the jurisdictions including King County, the Local Agency, and the Associated Agency (if pertinent) will work cooperatively and collaboratively.
Policy #15, Revisions to Standards, Procedures, and Policies: MWPAAC shall review and make recommendations on proposed revisions to the Regional I/I Control Program Standards, Procedures, & Policies. MWPAAC shall recommend whether or not a revision should be adopted as part of the Regional I/I Control Program.

Page intentionally left blank

I/I POLICY CATEGORY: **Policy Considerations for Regional I/I Reduction Projects and Control Program That Support the Standards and Procedures (Applies to Public and Private Systems)**

I/I CONTROL POLICY ISSUE: **Program Design - Public Funding and Scope of Work**

The extent of public intervention and assistance in reducing or eliminating I/I from Private properties will be shaped by a series of public policy choices. Some of the choices, like incorporating extensive surface and sub-surface restoration of private property, may require a series of adjunct policies. Other approaches may require only minor modification of local codes and regulations.

POLICY 1

Public funding should be considered for all phases of I/I mitigation work on privately owned property. Funded work should include scope of work elements such as: permits, investigation, inspection and testing, any modifications to the side sewer connections and laterals, connections to public systems, restoration of disturbed areas (including landscaping, sidewalks, driveways, and rights-of-way) and post-rehabilitation testing and enforcement. Environmentally infeasible &/or prohibitively expensive modifications should be considered for variances/waivers.

EXPLANATION

- Because maintenance and operation of the sanitary sewer system is for the public health and welfare, ensuring the elimination (or major reduction of) excessive I/I is usually considered a legitimate use of public funds.
- This alternative focuses on all types of private property, including residential commercial, and industry.

POTENTIAL LOCAL AGENCY IMPACTS

- Given the expenditure required for public funding of an extensive program, the Regional I/I Control Program would probably be initiated in selected mini basins (or smaller areas) with excessive I/I flow rates and with cost-effective solutions.

POTENTIAL KING COUNTY IMPACTS

- County may need to assist with code enforcement funding.

POTENTIAL PRIVATE PROPERTY/RATEPAYER IMPACTS

- Property owners in a selected area would have to participate in this program.
- Utility rates would increase to pay for the I/I mitigation work; although substantial grant funding could reduce the burden on the local rate base.
- With full funding, issues such as constructing the program to accommodate economic hardship (of specific individuals as well as for customer classes such as those with fixed and low-income) would not be necessary. Administrative costs could probably be reduced through economies of scale.

POTENTIAL REGIONAL IMPACTS

- The Local Agency or King County could directly employ contractors.
- Before rehabilitation work, the following areas would be "negotiated" with the property owner: a repair and rehabilitation agreement covering access to the property, and indemnifications and mandatory maintenance of the line by the property owner.

I/I POLICY CATEGORY: **Policy Considerations for Regional I/I Reduction Projects and Control Program That Support the Standards and Procedures (Applies to Public and Private Systems)**

I/I CONTROL POLICY ISSUE: **Community Education and Involvement – Regional Education Programs**

The I/I Control Program will result in the expenditure of public funds. There will be an array of inquiries, complaints, questions and suggestions from the general public, ratepayers, tenants and property owners. The manner in which these are tracked and resolved will have a major impact upon the public perception of the Regional I/I Control Program. For acceptance as a necessary public program, members of the public will need to understand the purposes of the regional program, and its benefits to the community and to individual property owners and rate payers.

POLICY 2

King County, in conjunction with the Local Agencies, shall create and promote regional educational programs to introduce the general public to I/I as an issue, to explain the potential benefits from I/I mitigation efforts, and to inform the public of their responsibilities related to the I/I problem. Educational/informational materials shall be designed such that each local jurisdiction will be able to modify them to meet their local needs. Additionally, King County shall function as a central clearinghouse in responding to inquiries about the Regional I/I Control Program.

EXPLANATION

- Input from all of the focus group sessions associated with the Regional I/I Control Study stated that public education would be the key to addressing I/I from private property.
- The public's knowledge about storm and sanitary sewer systems and, in particular, I/I issues, is limited. Generating understanding of a program of this size and complexity is necessary in order to gain public support.
- A regional education program would explain the benefits of I/I reductions to:
  - the county-wide sewer system
  - the costs and benefits to the public, and
  - the benefits to private property owners.
- A central clearinghouse is easier to establish and publicize and it simplifies managing trained personnel. Its operation would be uniform and would help establish and maintain system-wide policies and standards. The staff of a centralized clearinghouse could be divided into geographic sections to allow for greater familiarity with local concerns and jurisdictions.
- Unit costs for such a centralized system should be lower than that of local offices and this might also allow for more comprehensive services: specialized help, longer hours of operation and better staff training.
- Communication between a centralized clearinghouse and a system-wide administration would be easier, while communications with the various sewer districts, Local Agencies, local jurisdictions and contractors could be more difficult.

POTENTIAL LOCAL AGENCY IMPACTS

- The Local Agency would have less work in developing materials and operating local educational programs. If they desire, Local Agencies and jurisdictions could revise information or just insert the agency's logo.

- Decisions regarding resolution of issues would follow general, system-wide protocols. These may reduce the influence and specific decision-making powers of the Local Agency.
- Using trained customer service representatives who use consistent approaches would emphasize the *regional* nature of the I/I Control Program and buffer the Local Agency from dissatisfied individuals.
- It would allow for the wide distribution of contact information for I/I projects.
- A regional program should be coordinated with, and inform the public about, the role of Local Agencies and jurisdictions. A local staff member assigned to answer questions might help avoid the public's confusion about the program and the roles and responsibilities.

POTENTIAL KING COUNTY IMPACTS

- King County would prepare and disseminate public educational material explaining the I/I Control Program.
- A countywide educational program would allow the County to establish a uniform "umbrella", and maintain common themes and ideas about the I/I Control Program.
- A countywide program would enable the distribution of overall program explanations and designs. It would also allow for more efficient distribution of information.
- The staff of a centralized clearinghouse would likely be better at understanding the system-wide issues but less familiar with local concerns.
- The program would have a stronger County identification.
- The clearinghouse might include a single phone number, advertised broadly and easily found.

POTENTIAL PRIVATE PROPERTY/RATEPAYER IMPACTS

- An awareness that changes in managing sewer and storm water is about to take place.
- Materials are carefully tailored to areas with problems and geared to specific Local Agency needs; regional program ideas remain.
- Ongoing Public Education – In order to maintain the rehabilitated sewer system, the property owner will need to be reminded of the importance of keeping major landscaping and buildings out of the utility maintenance easement area.
- Interested parties would not have to search for whom to contact regarding the work to be, or being, done on their property. It might reduce the frustration of dealing with a "bureaucracy". On the other hand, those who continue to be dissatisfied may turn to local political representatives or agency managers for more satisfactory relief.

POTENTIAL REGIONAL IMPACTS

- The initial media campaign would have a coordinated and uniform message (like the information on drought and energy management) with tweaks for each local area to meet their specific needs and issues.
- Such a program could use various regional resources including: schools, libraries, web sites, the media and mailing stuffers. This would reinforce the concept that I/I impacts the region and that the solutions are regional.
- The program would have a stronger regional approach.

* See Appendix D for samples for pilot projects

I/I POLICY CATEGORY: **Policy Considerations for Regional I/I Reduction Projects and Control Program That Support the Standards and Procedures (Applies to Public and Private Systems)**

I/I CONTROL POLICY ISSUE: **Community Relations – Specific Project Community Education and Involvement**

I/I reduction projects will disrupt public and private property. There will be an array of inquiries, complaints, questions and suggestions from the general public, ratepayers, tenants and property owners. The manner in which these are tracked and resolved will have a major impact upon the perception of the Regional I/I Control Program. For acceptance of specific I/I reduction projects, members of the public need to understand the purposes of the project, its benefits to the community and to individual property owners.

POLICY 3

Unless otherwise specified or negotiated in the IGA, for each specific I/I reduction project being led by a Local Agency, the Local Agency shall be responsible for community education/involvement. Unless otherwise specified or negotiated in the IGA, if King County is the Lead Agency, the County shall be responsible for community education/involvement.

EXPLANATION

- It is generally better for the agency that is leading the project to be responsible for community relations, since they are most familiar with the specifics of the project and most aware of community concerns. Flexibility is provided, however, through the specific IGA so that, for each project, community relations' responsibility can be assigned to the Local Agency and/or King County as conditions merit.

POTENTIAL LOCAL AGENCY IMPACTS

- Local jurisdictions have greater responsibility with locally managed projects: Local Agencies and jurisdictions would implement the local design and implementation of the project-related educational and community involvement material.
- If King County manages the project, King County would be most familiar with the project and generally be in the best position to lead community relations efforts, decreasing Local Agency staff and resource needs.
- Flexibility in the IGA allows the Local Agency great latitude in determining responsibility for community relations.
- A District may not have the legal authority or the political backing to resolve property issues within a city's boundaries.
- Public education will have to be carefully tailored to areas with problems.

POTENTIAL KING COUNTY IMPACTS

- Less opportunity to generate regional approach.
- The County would usually not be the focal point for individual customer service issues for projects led by Local Agencies.

POTENTIAL PRIVATE PROPERTY/RATEPAYER IMPACTS

- Individuals might feel that their elected local representatives would be more understanding and sympathetic to their concerns since materials are geared to their specific needs by the Local Agency.
- If an individual disagreed with a staff member's decision, a local problem resolution process may be more convenient and familiar.
- No "economies of scale" in comparison to regional system.

POTENTIAL REGIONAL IMPACTS

- No regional approach.

* See Appendix D for samples from pilot projects

I/I POLICY CATEGORY: **Policy Considerations for Regional I/I Reduction Projects and Control Program That Support the Standards and Procedures (Applies to Public and Private Systems)**

I/I CONTROL POLICY ISSUE: **Rehab Planning, Oversight, Inspection, Monitoring and Testing – Right of Entry**

With specific exceptions, individuals cannot enter or alter property owned by another individual without explicit permission (authority for utility representatives to access private premises for the purpose of inspecting and determining code compliance can be legislated for public health and welfare). Yet initial follow-up and inspection of the condition and installation of public sewer lines and private sewer and storm drainage connections is a key to ensuring that I/I is not occurring. New standards need to be developed to ensure that the system remains intact and maintained. The right of entry for purposes other than verification of code compliance usually requires either a written agreement between the public entity and the private property owner or a notice of potential legal action.

POLICY 4

The Local Agency shall pass the necessary ordinances/resolutions and develop the appropriate access agreements that allow each agency or its agents to gain access to private property, such as a right of entry or a construction and inspection easement. These agreements will allow certain actions related to I/I reduction and control, such as conducting a side sewer and/or lateral inspection; construction rehabilitation; or conducting code enforcement activities.

EXPLANATION

- The right of entry to verify code compliance is usually limited in several ways, the most basic of which is that entry must occur at reasonable times. This and other limiting provisions listed below may be adopted by the utility's administration and may not be codified.
  - Entry only by individuals with "proper" identification;
  - Entry only with prior notice;
  - Entry only with written information regarding the nature of the inspection and with the findings of the investigation (notice of non-compliance with which specific portions of the code; notice of remedies and/or potential penalties).
- The method(s) used for code compliance enforcement, inspection and testing or monitoring is not implicitly or explicitly included in this basic right of entry.
- Right of entry agreements, easements and legal notices will vary in complexity and scope of action though with legal advice some basic policy procedures can be drafted and used in routine actions. Unique agreements would be drafted for complex or unusual situations. General delimiters for access agreements include scope of public action, result of property damage or personal injury, and hold harmless and indemnification provisions. Administrative use of these legal instruments depends upon the authority granted by the Local Agency's legislative body.

POTENTIAL LOCAL AGENCY IMPACTS

- Allows the flexibility for Local Agencies to select and implement their preferred programmatic approach (e.g., all new side sewers could be located in an easement area that allows for future entry by the Local Agency to perform inspections and work without a separate right-of-entry agreement; side sewer permits could be expanded to include the entire residential drainage system).
- Local Agencies will undertake different actions according to their I/I reduction projects and applicable local regulations. Since most municipalities' codes allow only sewerage to enter the sanitary

sewer system, using the basic right of entry to investigate code compliance could be the first action to control improper inflow from private property. Once the initial I/I control remedies are in place, periodic investigation of code compliance may involve increased resources such as: inspectors, code compliance officers, engineers and/or attorneys. Record keeping would be crucial to track follow-up actions and inspection schedules.

- Utility storm water and sanitary sewer codes may have to be amended to include right-of-entry authority.
- The ease or difficulty of obtaining specific right-of-entry agreements or easements will depend on the property's I/I contribution to the system and the Policies and Standards of the I/I Control Program, e.g., the scope of work or the amount of restoration.
- Coordination between areas of responsibilities would be key, e.g., building permits and sewer permits; building and utility inspectors; maintenance, engineering and CIP personnel.

POTENTIAL KING COUNTY IMPACTS

- County Council may have to pass an ordinance granting Local Agencies authority.

POTENTIAL PRIVATE PROPERTY/RATEPAYER IMPACTS

- Many individuals may not realize that municipal representatives have the authority to enter their property to perform code compliance inspections. Municipal employees and legislators may have to cope with a range of reactions from accommodation to active resistance. These actions can be anticipated and a plan of action established.
- The types of private improvements (and landscaping) in the easement area should be restricted to simplify and standardize any future side sewer work and to prevent side sewer deterioration. There should be restrictions to the property owner making changes in side sewer location when remodeling occurs.
- The residential property owner's contractor would remain responsible for the work performed meeting code and that it is "signed off" by the jurisdiction's inspector.
- The cost of permits could increase to cover the increased intensity of service or the cost could be absorbed within the general residential rate base.

POTENTIAL REGIONAL IMPACTS

- If an aggressive code compliance investigation program is initiated without the follow-up of code enforcement, there will be no change in the amount of I/I entering the system from private property.

I/I POLICY CATEGORY: **Policy Considerations for Regional I/I Reduction Projects and Control Program That Support the Standards and Procedures (Applies to Public and Private Systems)**

I/I CONTROL POLICY ISSUE: **Rehabilitation Planning and Oversight – Inspection and Testing**

Initial and follow-up inspection and investigation of the condition and installation of public sewer lines and private sewer and storm drainage connections is a key to ensuring that neither inflow nor infiltration is occurring. The type and extent of inspection and investigation could vary depending upon the focus, extent and the approach selected to remove I/I from privately owned property and public sewer lines.

POLICY 5

To promote region-wide consistency, King County in conjunction with the Local Agencies shall provide training opportunities on the I/I Control Program to agency representatives. The training material will include a checklist of guidelines for best practices and the adopted Regional I/I Control Standards, Procedures & Policies.

EXPLANATION

- Because inspections are such an integral part of controlling I/I from private property, specially trained staff would ensure that the inspections occur with consistency and uniformity.
- The inspections could include a regionally uniform variety of tasks, such as: checking all connections, testing all lines, verifying the functionality of on-site and/or off-site storm drainage management, and ensuring restoration of sidewalks, driveways and rights of way.

POTENTIAL LOCAL AGENCY IMPACTS

- Side sewer permits would be expanded to include the entire residential drainage system.
- Coordination between areas of responsibilities would be key, for example, building permits and sewer permits; inspectors and paving crews; sewer maintenance/storm water maintenance and inspectors; and inspectors and maintenance, engineering and CIP personnel.

POTENTIAL KING COUNTY IMPACTS

- Workload and equipment sharing could produce an economy of scale.
- Preparation of training material and course curriculum as well as scheduling and holding training sessions would be County responsibilities.

POTENTIAL PRIVATE PROPERTY/RATEPAYER IMPACTS

- The property owner's contractor would remain responsible for ensuring work performed on private residential property meets code and has been "signed off" by the Local Agency's "I/I Control Inspector".
- The cost of this expanded inspection and testing service could be included in the jurisdictions' sewer permit, in the base ("METRO") wholesale rate, or be absorbed within a newly created I/I rate component.

POTENTIAL REGIONAL IMPACTS

- Cross-training and a widened skill base (including storm water, plumbing, residential drainage and sanitary sewer guidelines and codes) may provide the foundation for an inter-disciplinary approach to problem solving, and a basin perspective in addition to a jurisdictional perspective.

- Some form of auditing might be appropriate to ensure the inspections, investigations and tests are consistent with the Regional I/I Control Program Standards and Guidelines.

I/I POLICY CATEGORY: **Policy Considerations for Regional I/I Reduction Projects and Control Program That Support the Standards and Procedures (Applies to Public and Private Systems)**

I/I CONTROL POLICY ISSUE: **Rehabilitation Planning and Oversight – Liability**

All phases of the I/I work on privately owned property could create liability issues. Some liability issues such as negligence, is a recognized concern. Side sewer and other excavation on private property may result in some special liability issues. The standards of work and documentation of conditions on private land are more varied than those found on public property and public right-of-ways. Potential liability matters may be limited in various ways.

POLICY 6

If public resources support any portion of the I/I reduction work on privately owned property, then the Lead Agency shall establish a process to manage and limit its liability. The potential site and in-ground liability issues shall be a part of the I/I planning and design process, including an up-front agreement on when the jurisdiction's liability will begin and end.

EXPLANATION

- When digging on private land, various types of unexpected conditions and systems are likely to be found, for example: underground oil tanks and contaminated soils, sprinkler systems and water lines, "invisible" dog fences, non-conforming in-use wells and septic systems, electrical and data cables, etc. Some of these conditions and systems are likely to be found in the areas of any side sewer work and pose a liability issue to the homeowner, contractor, governmental agency and/or the general public.
- Field reports suggest that about 25% of oil tanks leak. If contaminated soil is found during an excavation, then remediation is required and the issue of liability would have to be addressed.

POTENTIAL LOCAL AGENCY IMPACTS

- Pre-digging protocols such as inspections to identify underground infrastructures and/or contaminated soil could reduce the potential liability disputes and costs.
- Resolution of disputes may become an issue that will need to be addressed by Local Agency staff and/or their attorneys..
- The responsible jurisdiction will *need to work closely with the homeowners, no matter what.*

POTENTIAL KING COUNTY IMPACTS

- If King County is the Lead Agency, inspectors and administrative staff will be necessary to assist in minimizing liability.

POTENTIAL PRIVATE PROPERTY/RATEPAYER IMPACTS

- Property owners may refuse permission to inspect or test for potential liability issues and might prefer not to know about such issues.
- Property owners may end up having to address the problem of soil contamination.
- Property owners will desire that the work minimize disruption to property existing improvements and landscaping.

POTENTIAL REGIONAL IMPACTS

-

I/I POLICY CATEGORY: **Policy Considerations for Regional I/I Reduction Projects and Control Program That Support the Standards and Procedures (Applies to Public and Private Systems)**

I/I CONTROL POLICY ISSUE: **Contractor Bonding, Licensing and Warranty**

POLICY 7

The Lead Agency shall be responsible for ensuring that, for publicly funded I/I reduction projects, the construction contract includes appropriate bonding, licensing, insurance, and warranty provisions to ensure satisfactory completion of the project and warranty of the project for a sufficient amount of time (recommended minimum 12 months).

EXPLANATION

- Contractors for public projects must be licensed, bonded and insured. For publicly funded projects, agencies generally establish standards for contractor bonding, end of project retainage, and warranties that ensure the completed facilities will continue to function as intended for a reasonable period of time.
- A schedule of required contractor warranties would be established at the beginning of a project. For example, pipe performance would have a longer warranty requirement than pumps.

POTENTIAL LOCAL AGENCY IMPACTS

- A "retainage" could be required to be held back after "substantial completion" of the work. The retainage would be released once all punch list items have been completed and final inspections performed.
- Bonding, retainage and warranties reduce the likelihood of poor work and future maintenance/repair requirements. However, such standards increase contractor costs and prices.
- All contractors could be required to maintain a performance bond equal to a pre-determined percentage of the project cost.
- Such standards increase contractor costs and prices.

POTENTIAL KING COUNTY IMPACTS

- Bonding, retainage and warranties reduce the likelihood of poor work and future maintenance/repair requirements.

POTENTIAL PRIVATE PROPERTY/RATEPAYER IMPACTS

- Higher up front costs, but lower maintenance costs.
- Better quality control of the I/I work.
- Any allowed "do it yourself" work would most likely not be subject to bonding or warranty requirements.

POTENTIAL REGIONAL IMPACTS

- Better long term I/I control.

I/I POLICY CATEGORY: **Policy Considerations for Regional I/I Reduction Projects and Control Program That Support the Standards and Procedures (Applies to Public and Private Systems)**

I/I CONTROL POLICY ISSUE: **On-site Storm Drainage Management**

If storm water is diverted away from the existing sanitary sewer system, then alternatives may need to be found for the diverted storm water. Property owners, Local Agencies and Associated Agencies may need new options for surface and ground water drainage management.

POLICY 8

Where I/I work on private or public property results in the diversion of storm water drainage, and there exists a storm water system, then the I/I work shall involve meeting the provisions of the controlling jurisdiction's current "storm water drainage" ordinances. Jurisdictional approval must be obtained.

EXPLANATION

- In areas with an existing public storm water management system, all drainage diverted from the sewer system could be discharged into the storm water system, provided that:
  - The jurisdiction controlling the public storm water system approves the connection; and
  - There are sound design options, capacity and gravity flow.

POTENTIAL LOCAL AGENCY IMPACTS

- The capacity of the storm water system would have to be evaluated and a determination made regarding these new loads. Some of the storm water systems may have to be upgraded. The costs for engineering analysis and design, construction and connections may be significant. Grants from the County's Surface Water Utility or the Public Works Trust Fund might help defray the cost of new and/or expanded storm water systems.
- This policy assumes that public funds for the removal of I/I would pay for the permits, engineering and other expenses associated with connecting storm water to a public system.

POTENTIAL KING COUNTY IMPACTS

- The County may consider ensuring adequate capacity of public storm water systems as an adjunct cost to the I/I program, but that would significantly reduce funds available for directly reducing regional I/I.

POTENTIAL PRIVATE PROPERTY/RATEPAYER IMPACTS

- This will likely improve drainage and water intrusion problems for the affected homes and properties. The cost of the lines and connections to the storm water system will depend upon individual conditions.
- Potential increased storm water costs, including costs to connect to the storm sewer system.

POTENTIAL REGIONAL IMPACTS

-

I/I POLICY CATEGORY: **Policy Considerations for Regional I/I Reduction Projects and Control Program That Support the Standards and Procedures (Applies to Public and Private Systems)**

I/I CONTROL POLICY ISSUE: **On-site Storm Drainage Management**

If storm water is diverted away from the existing sanitary sewer system, then alternatives may need to be found for the diverted storm water. Property owners, Local Agencies and Associated Agencies may need new options for surface and ground water drainage management.

POLICY 9

Where I/I work on private property results in the diversion of storm water and an adequate storm water system does not exist, then the private property owner bears responsibility for discharging the storm water drainage to an appropriate location.

Where I/I work on public property results in the diversion of storm water and an adequate storm water system does not exist, the Local Agency or Associated Agency bears the responsibility for discharging the storm water drainage to an appropriate location.

EXPLANATION

- Connecting residential storm water systems to the public sewer system is illegal. Therefore, illicit connections should be removed. This is a provision of the contract between the Local Agencies and King County.
- Properties with impermeable and semi-permeable surfaces have storm water drainage requirements. For example: most roofs and driveways, lawns and hard packed soils don't allow for storm water absorption, retention or evaporation. Alternative practices can be used to reduce or eliminate the need for off site storm water systems. For example:
  - Surface and ground water drainage can be collected and directed to location(s) on the property where the water can drain into the ground by means of an energy dissipation basin (French drain). The feasibility and effectiveness of such systems depend upon its design, lot size and topography, soil type and local area conditions. The complexity of energy dissipation basins will also depend upon local conditions and drainage requirements.
  - Poor maintenance can increase and exacerbate storm water problems. Tree limbs that overhang houses tend to increase the need for gutter and drain line cleaning/maintenance. Improper soil drainage at the perimeter of structures can increase basement and crawl space flooding.
  - Special landscaping practices can increase storm water absorption and retention.
  - Roofs with a planted sod layer can hold and evaporate storm water.
  - Driveways can be made out of porous pavers and other materials that allow for water absorption.
  - Rain barrels and cisterns can be used to recycle storm water for gardening and some domestic use.
  - Ponds can be used to hold and evaporate storm water.

POTENTIAL LOCAL AGENCY IMPACTS

- Design and construction review may be required. As a first measure, this could be a lower cost alternative for Local Agencies than side sewer repair. If properly designed, constructed and inspected, once in place, there would be little impact on Local Agencies.
- Reduction of storm water flow into the sanitary and storm water system.

POTENTIAL KING COUNTY IMPACTS

- On site drainage system will result in lower storm water inflow into the County's sewage conveyance and treatment system.

POTENTIAL PRIVATE PROPERTY/RATEPAYER IMPACTS

- Appropriate management of storm water flow on private property could have direct benefits to the homeowners and the public sanitary and storm water systems, such as:
  - Proper use of on-site storm water management systems would likely result in dryer homes, basements and crawl spaces.
  - Dryer homes tend to have fewer problems with wood destroying organisms, mold and mildew. Dryer homes have longer lasting furnaces, roofing and interior surfaces.
  - Many of the defects that are likely to be found in such inspections have low cost and low impact solutions. Such on site systems usually don't require extensive digging or interference with decks or in-ground systems such as water lines or oil tanks.
  - When properly designed, they require a modest amount of maintenance.

POTENTIAL REGIONAL IMPACTS

-

I/I POLICY CATEGORY: **Policy Considerations for Regional I/I Reduction Projects and Control Program That Support the Standards and Procedures (Applies to Public and Private Systems)**

I/I CONTROL POLICY ISSUE: **On-site Storm Drainage Management**

If storm water is diverted away from the existing sanitary sewer system, then alternatives may need to be found for the diverted storm water. Property owners, Local Agencies and Associated Agencies may need new options for surface and ground water drainage management.

POLICY 10

Where an I/I reduction project results in the diversion of storm water drainage (e.g., removal of illicit connections), and the modifications required to properly discharge the storm water are deemed to be infeasible &/or prohibitively expensive (for the property owner), consider giving the property owner a choice of disconnection of illicit connection or surcharge.

EXPLANATION

- Connecting residential storm water systems to the public sewer system is illegal. Therefore, illicit connections should be removed. This is a provision of the contract between the Local Agencies and King County. However, if re-routing the storm water drainage, to either a public storm water management system or another appropriate location is deemed infeasible &/or prohibitively expensive (for the property owner), the alternative of a surcharge may be offered.

POTENTIAL LOCAL AGENCY IMPACTS

- If a property owner chooses to pay a surcharge, rather than to disconnect an illicit connection, utility rate revenue will increase.
- Additional administrative processes will be necessary.

POTENTIAL KING COUNTY IMPACTS

- If a property owner chooses to pay a surcharge, rather than to disconnect an illicit connection, a smaller amount of I/I reduction may be achieved in the County's regional sewer system than the County expected.

POTENTIAL PRIVATE PROPERTY/RATEPAYER IMPACTS

- A private property owner with an illicit connection may have the opportunity to reduce the cost of compliance.

POTENTIAL REGIONAL IMPACTS

- If private property owners choose to pay surcharges instead of re-routing storm water drainage from illicit connections, a smaller amount of I/I reduction may be achieved in the regional sewer system than the County expected, and the timeline for building new regional sewer capacity may be advanced. This could increase sewer rates region-wide earlier than expected.

I/I POLICY CATEGORY: **Policy Considerations for Regional I/I Reduction Projects and Control Program That Support the Standards and Procedures (Applies to Public and Private Systems)**

I/I CONTROL POLICY ISSUE: **Post-Rehabilitation Management – Restoration**

Many of the private property I/I mitigation options can interfere with private property conditions, especially buildings, site work and landscaping. Restoration of these disturbed areas could be expensive and complicated. A poorly understood or badly managed restoration policy and program could lead to significant public distrust, concerns, and problems. A policy is required that outlines the roles, responsibilities and any limits on such restoration work.

POLICY 11

If confirmed by legal counsel.

The Lead Agency shall establish a standard for property restoration before initiating any I/I work (including landscaping, sidewalks, and driveways). Public property restoration is governed by Local Agency or Associated Agency codes or ordinances.

Options can include:

1 – "Restoration as near as possible to pre-construction condition"
2 – "Basing value on restoration to as near as possible to pre-construction condition, consider up front property owner payment with signed waiver"

EXPLANATION

- Some amount of restoration of private properties would be part of the I/I reduction program.
- Prior to the start of any I/I work, the property would be inspected and photographed, and relevant improvements and conditions would be thoroughly documented.
- The public funds used for this purpose would compensate for all of the agreed to restoration work or up front payment in recognition of the public benefits derived from the I/I program.
- Since certain plant/vegetation types are not easily restored, a "restoration to pre-construction condition" standard is not always possible.
- Disagreements would use the preferred method as chosen from the alternatives under Policy 4.

POTENTIAL LOCAL AGENCY IMPACTS

- A more complex program that recognizes the impact of the I/I program upon private property.

POTENTIAL KING COUNTY IMPACTS

- Higher program cost and potential for property owner dissatisfaction with the extent or quality of the restoration work.

POTENTIAL PRIVATE PROPERTY/RATEPAYER IMPACTS

- Impacted Property Owners – Depending on the choice made, property impacts could be small to large, but property owner would receive rehabilitated side sewer.
- Ratepayers – Increases the cost of the I/I Control Program and therefore might result in higher rates.

POTENTIAL REGIONAL IMPACTS

- Depending on choice made, I/I reduction at a higher cost.

I/I POLICY CATEGORY: **Policy Considerations for Regional I/I Reduction Projects and Control Program That Support the Standards and Procedures (Applies to Public and Private Systems)**

I/I CONTROL POLICY ISSUE: **Contractor Qualifications**

A critical success factor for reducing I/I is to make sure contractors have experience using acceptable materials and skilled labor resources to perform construction and I/I rehabilitation of public sewer systems. One way to assure the qualifications of the contractors is through a review of their past performance and bonding and financial ability, and of the experience of their key supervisory staff. Contractor qualifications often become an issue during the selection process on public projects since the primary basis of award is "Low Bid".

POLICY 12

The Lead Agency shall develop in the bid specifications specific minimum experience requirements for contractors to ensure that the contractor hired will have experience in the type of work they are to perform.

EXPLANATION

- The ability to require contractors to meet certain minimum experience conditions can result in better I/I reduction projects.
- Prior experience with specialized sewer technologies is necessary to ensure correct handling and application of these technologies. Prior experience with construction such as tunnels, systems restoration/rehabilitation, and deep excavation is also necessary.

POTENTIAL LOCAL AGENCY IMPACTS

- Assures higher quality work.

POTENTIAL KING COUNTY IMPACTS

- Greater probability of highest quality sewer systems and thus less potential for I/I in the future.
- Possible requirements for "Regional" minimum experience standards for sewer contractors hired by the County to assure more consistent construction.

POTENTIAL PRIVATE PROPERTY/RATEPAYER IMPACTS

- Assurance of quality systems, lower potential for future repair/replacement, better bids and less chance for disputes.

POTENTIAL REGIONAL IMPACTS

- Better overall sewer systems and less potential for I/I in the future.
- Reduces potential for contractors lacking adequate experience to be able to bid on public sewer work.

I/I POLICY CATEGORY: **Policy Considerations for Regional I/I Reduction Projects and Control Program That Support the Standards and Procedures (Applies to Public and Private Systems)**

I/I CONTROL POLICY ISSUE: **I/I Reduction Projects – Permits**

Permits and conditions are usually required on I/I reduction projects. Responsibility for obtaining these permits can vary. This policy gives general guidance as to how this should be handled.

POLICY 13

The Local Agency should obtain all permits feasible, including the SEPA, HPA, 404, or other State or Federally required permits. The contractor should obtain permits as detailed in the specifications such as the building, road or utility, ROW use, &/or clearing and grading permits. The permits required to be obtained by the contractor should be specifically listed in the bidding documents.

EXPLANATION

- Several permits may be required for work on I/I reduction projects. Project environmental permits should be obtained by the Local Agency, while permits such as building, utility and ROW should be obtained by the contractor.

POTENTIAL LOCAL AGENCY IMPACTS

- The Local Agency would be responsible for obtaining those permits not specifically related to construction as part of its administrative duties.
- Potentially higher program cost.

POTENTIAL KING COUNTY IMPACTS

- If the IGA designates King County as responsible for obtaining permits, additional King County resources will be necessary.

POTENTIAL PRIVATE PROPERTY/RATEPAYER IMPACTS

- Permits and conditions associated with permits help assure that public concerns and issues are addressed and mitigated.

POTENTIAL REGIONAL IMPACTS

-

I/I POLICY CATEGORY: **Policy Considerations for Regional I/I Reduction Projects and Control Program That Support the Standards and Procedures (Applies to Public and Private Systems)**

I/I CONTROL POLICY ISSUE: **I/I Reduction Projects – Permits**

Because there is a likelihood that multiple jurisdictions will be involved in obtaining permits, it is necessary to encourage cooperative, coordinated efforts.

POLICY 14

For all permit needs, the jurisdictions including King County, the Local Agency, and the Associated Agency (if pertinent) will work cooperatively and collaboratively.

EXPLANATION

- Permit efforts in the I/I program will likely require multiple jurisdictions, and coordinated, cooperative efforts will allow for better communications and permit processing.

POTENTIAL LOCAL AGENCY IMPACTS

- Coordination will be necessary with King County and the Associated Agency.

POTENTIAL KING COUNTY IMPACTS

- Coordination will be necessary with the Local Agency and the Associated Agency.

POTENTIAL PRIVATE PROPERTY/RATEPAYER IMPACTS

- Coordinated, cooperative efforts will save money and result in better projects.

POTENTIAL REGIONAL IMPACTS

- Coordinated, cooperative efforts will increase overall communication in the I/I Control Program.

I/I POLICY CATEGORY: **Policy Considerations for Regional I/I Reduction Projects and Control Program That Support the Standards and Procedures (Applies to Public and Private Systems)**

I/I CONTROL POLICY ISSUE: **Revisions of Standards and Guidelines**

As new experience, technology and information support changes in the regional standards, a method to revise the standards will be needed. Revisions may be of a regional, uniform nature or they may be unique to one or more of the Local Agencies. If Local Agencies individually revise standards, over time, the standards could vary from the regional "model"; although, the degree and significance of the variance are difficult to predict.

POLICY 15

MWPAAC shall review and make recommendations on proposed revisions to the Regional I/I Control Program Standards, Procedures, & Policies. MWPAAC shall recommend whether or not a revision should be adopted as part of the Regional I/I Control Program.

EXPLANATION

- MWPAAC is the official representative body for the Local Agencies who are served by the King County Wastewater Treatment Division. It is a group recognized by the Local Agencies and the County as the arena for discussing and recommending policies that affect all the agencies. King County is also a member of MWPAAC.
- The underlying assumption for adoption of Regional I/I Control Standards is that the standards provide a uniform foundation for comparing and evaluating engineering techniques regardless of location within the region. Validation of information will not be scientifically valuable if different standards are applied to solve similar I/I control problems. Disallowing independent revision of standards would reduce, if not eliminate, variability from the regional "model".

POTENTIAL LOCAL AGENCY IMPACTS

- As part of the decision-making process, the Local Agencies would consider whether or not to actively participate on the MWPAAC Subcommittee – weighing the consequences for their agency.
- For any recommended changes to the I/I Control Program, each Local Agency will have the ability to review and provide input on that particular change.
- Local Agencies would not have the unilateral authority to make revisions.
- As part of the regional decision-making process, the Local Agencies would abide by the recommendations of the MWPAAC vote as they negotiate Intergovernmental Agreements with King County.

POTENTIAL KING COUNTY IMPACTS

- Provides one established group as the group to go to related to the I/I Control Program.
- The County may become the repository of the "master document". Revisions and updates that change the document would not be through the County Council or a representative of the County Administration, but by the vote of the MWPAAC membership.
- King County can work with one entity for resolving I/I Control Program issues.

POTENTIAL PRIVATE PROPERTY/RATEPAYER IMPACTS

- It may be perceived to be more difficult for individuals to influence changes to the standards if there is a regional group rather than if there is a local administrative or legislative method.
- Local codes and regulations governing individual waivers and variances would remain intact.

POTENTIAL REGIONAL IMPACTS

- Standards would be relatively uniform throughout the service area; with the possible exception that non-MWPAAC jurisdictions may make revisions without feeling bound to MWPAAC recommendations.

Page intentionally left blank

MWPAAC Engineering & Planning Subcommittee

FINAL DRAFT

Intergovernmental Agreement (IGA)

model/template IGA. The E&P Subcommittee discussed the modifications and approved the final draft model/template IGA that appears below. Specific policies and terms of any IGA are of course open to discussion and decision by each Local Agency and King County.

It is worth noting that several items are not included in this IGA chapter because it is believed that they do not affect I/I reduction. These IGA topics are:

1. Patents
2. Americans with Disability Act
3. Legal Relation (Indemnification)
4. Termination
5. Miscellaneous
6. Entire Agreement Section

AMENDMENT NO. ___ TO UTILITIES COOPERATION AGREEMENT BY AND BETWEEN

<Local Agency>

AND

KING COUNTY

FOR INFILTRATION/INFLOW CONTROL PROJECT

THIS AMENDMENT NO. ---- is made and entered into this _____ day of _____ between the City/District of _____(hereinafter, "_____") and King County, a home rule charter county in the State of Washington, acting through its Department of Natural Resources and Parks (hereinafter, "the County" or "DNRP").

WHEREAS, the parties desire to reduce I/I from both the <Local Agency> systems and the King County conveyance and treatment systems in order to enhance environmental and public health benefits and in order to improve system capacity conditions; and

WHEREAS, <Local Agency> and King County have cooperatively developed a Regional I/I Control Program, the intent of which has been to establish a regional plan for developing technical, policy, and financial means for reducing I/I in the regional system; and

WHEREAS, King County desires to work with <Local Agency> to investigate the sewer system and reduce infiltration and/or inflow as a means to reduce flows to the King County conveyance and treatment systems; and

WHEREAS, <Local Agency> desires to control infiltration and inflow into their Local wastewater system and thereby reduce sewer flows that enter the regional wastewater system; and

WHEREAS, the parties desire to designate management and administrative responsibility and determine funding; and

WHEREAS, <City/District>_____ and King County entered into an Agreement dated _____, regarding participation in the County Infiltration/Inflow (I/I) Program Study, and

WHEREAS, the Parties desire to amend the prior Agreement by this Amendment No. _____.

NOW, THEREFORE, the parties do Agree as follows: The prior Agreement is modified, altered, and changed in the following respects only:

MODIFICATIONS AND INSERTIONS

<Applicable when either the Local Agency or the County is the Lead Agency>

Addition to Section 1: Purpose and Duration of the original Agreement

Section 1: Purpose and Duration

1.4 Purpose of Amendment

<Clause "a" when Local Agency is the lead>

a. The purpose of the Amendment is to provide for <Local Agency> management and administration of the project and to further provide for King County funding of the project and oversight of <Local Agency> management and administration responsibilities.

<Clause "a" when County is the lead>

a. The purpose of the Amendment is to provide for King County management, administration and funding of the project and assign certain specific duties and oversight to <Local Agency>.

b. In order to quantify the effectiveness of the rehabilitation work performed within the project area, King County may conduct pre and post-construction flow monitoring

c. To maintain that project work will take place and be completed by <date>.

1.5 Sharing Information

The Parties agree that in order to maximize the efficiency of the I/I reduction projects, the Parties, to the extent allowable by <Local Agency> and King County policy, will share all pertinent information, especially as-built information related to the I/I reduction project, including but not limited to: design, cost estimates, specifications, bid documents, Geographic Information Systems (GIS), Sanitary Sewer Evaluation System (SSES), flow data, modeling, surveying information, citizen concerns and issues, etc.

Note: The pilot projects showed that inaccurate or non-existent as-builts led to concerns and necessitated much greater investigations.

Note: The pilot projects showed that regular construction meetings including both the County and the Local Agency were needed to avoid conflicts and concerns from arising.

1.6 Uniform Record Keeping and Constructed Drawings

The Parties agree to the goal that databases, information, records and constructed drawings will be in an electronic form mutually agreed upon and usable by the other party.

1.7 Sharing Materials and Equipment

The Parties agree to share materials and equipment to the extent possible in order to provide as efficient and cost effective a project as possible.

1.8 Standards, Procedures, Policies

The Parties agree that in order to maintain consistency, fairness, and quality projects that are effective in removing I/I and that benefit the Regional I/I Control Program, the Parties will use, at a minimum, the I/I Control Program Standards, Procedures, and Policies during the design and construction of this project.

<Use the following Modifications and Insertions when the Local Agency is the Lead Agency>

1.9 Changes in Scope of Work, Cost and/or Conditions
The Parties agree that change orders for scope of work, costs and/or changes in conditions will not result in an increased contribution to the project budget by the County. The financial contribution by King County to the project shall be _____ dollars ($_____)(Exhibit B). If one or more change orders result in significant cost increases to the project, the project scope of work will be re-evaluated and changed as necessary and as approved by both <Local Agency> and the County to ensure that the project budget stays within approved limits. If any single change order would result in or make necessary multiple similar change orders at other sites throughout the project basin, the initial change order shall be reviewed and approved by both <Local Agency> and the County. The Project Cost Estimate (Exhibit B) includes a 10% contingency for change orders for scope of work, costs, and/or for changes in conditions.

1.10 Ownership of Improvements
There will be no changes in facilities ownership due to any project improvements made, even if the improvements are made to private property.

1.11 Associated Agencies
Both parties will take steps necessary to inform and include <Associated Agency> in I/I reduction projects, including <be specific, e.g., communications, approvals, and involvement>.

Note: This section was not included in the original IGA template or in the actual IGA's for the pilots and was recommended as a valuable addition.

Addition to Section 2: County Responsibility of the Original Agreement

Section 2: King County Responsibilities

2.8 Environmental Review Process
<Local Agency> agrees to prepare an Environmental Review Document highlighting the I/I Program with specific information about this project.

2.9 Securing Applicable Permits
<Local Agency> shall be responsible for securing all applicable local permits for the project including but not limited to SEPA, building, right of way, grading, utility, shorelines and critical areas permits.

2.10 Financial Provisions
The County agrees to reimburse <Local Agency> on a monthly basis for approved direct costs and expenses invoiced during the previous month by the Contractor to the District per Exhibit A "Scope of Work." The reimbursed costs are not to exceed a total of _____ dollars ($_____) unless agreed to in writing by King County's program manager and <Local Agency>. Costs eligible for reimbursement are construction costs directly related to I/I removal within the scope of work of the project (Exhibit A), including but not limited to road overlay,

The County agrees to prepare an Environmental Review Document highlighting the I/I Program with specific information about this project. <Local Agency> agrees to review the document prior to distribution.

2.7 Securing Applicable Permits
King County shall be responsible for securing all applicable local permits for the project including, but not limited to, building, right of way, utility, shorelines and critical areas permits.

2.8 Post-Construction Flow Monitoring
The County agrees to conduct post-construction flow monitoring within the project area between <date> and <date>. The County agrees to share with <Local Agency> the results of this flow-monitoring period.

2.9 Entering Contracts with Contractor
King County agrees to enter into contracts with independent contractors as necessary to complete the project per approved scope of work (Exhibit A). The County's consulting team will perform engineering and design oversight for bidding and engineering on the contractor hiring process.

2.10 Insurance
King County shall require its contractor(s) to procure, maintain and provide evidence of coverage, including endorsements naming <Local Agency>, its officers, officials, employees and agents as additional insured.

Addition to Section 3: District Responsibility of the Original Agreement

Section 3: <Local Agency> Responsibilities

3.7 Securing Applicable Permits
<Local Agency> and King County agree to work cooperatively to secure all private property right of entry agreements with homeowners where necessary for the project. <Local Agency> agrees to accompany King County or its representative to meet with homeowners as necessary to explain the project and secure right-of-entry agreements.

3.8 Community Coordination and Communications
<Local Agency> and the County agree to jointly determine their roles for community coordination and communications for the project, and to jointly develop a public information/education plan for this project. The County agrees to assist in producing materials for public distribution.

3.9 Financial Provisions
The County agrees to pay for the work as detailed per Exhibit A "Scope of Work." Costs eligible for County payment are construction costs directly related to I/I removal within the scope of work of the project (Exhibit A), including but not limited to road overlay, post-construction restoration and private property restoration. Construction work done in conjunction with I/I project work such as system or capacity upgrades or projects <Local Agency> wishes to include for its own purposes such as separations of shared side sewers will not be eligible for King County payment. Where storm drain disconnections from the sanitary sewer are necessary,

the property owner shall be responsible for the re-routing of any disconnected and unauthorized drains. Costs to re-route storm drainage will not be eligible for County payment. The County will not pay for costs and expenses attributed to consultant services, contract procurement, administration and management or non-I/I related construction activity.

Note: Experience from the pilots indicate that financial responsibilities need to be established and agreed to by the Parties prior to beginning construction

<Use the "Modification to Section 7: Notice of the Original Agreement" that appears at the end of this document>

<Use this section when either the Local Agency or the County is the Lead Agency>

Modification to Section 7: Notice of the Original Agreement

Section 7: Notice

All Notices to the County or <Local Agency> required under terms of the Agreement and this Amendment shall be given in writing as follows:

To the County:
King County Department of Natural Resources and Parks
Wastewater Treatment Division
201 South Jackson St., MS KSC-NR-0512
Seattle, WA 98104
Attn: , Program Manager
Telephone: _____
Fax: _____

To <Local Agency>:
<Local Agency>
Address
Attn:
Telephone: _____
Fax: _____

IN WITNESS WHEREOF, the Parties have executed this Amendment No.1 to the Agreement for Infiltration/Inflow Program as of the date and year first written above.

<Local Agency>
Approved as to Form:

, Attorney
Representing <Local Agency>

<Local Agency>
Representing <Local Agency>

KING COUNTY
Approved as to Form:

Attorney WSBA #
Prosecuting Attorney

Director
Department of Natural Resources and Parks Approved as to Form:

Exhibit A: Project Scope of Work and Schedule

Exhibit B: Project Cost Estimate and Regional I/I Control Program Contribution

Exhibit B is only applicable if the Local Agency is the Lead Agency.

APPENDIX A

SUMMARY OF REVISIONS TO DRAFT STANDARDS AND GUIDELINES

BASED ON MWPACC ENGINEERING AND PLANNING SUBCOMMITTEE INPUT

Standard/Guideline Title & Description of Subcommittee Decision for October 21, 2002 Working Draft	Implementation of Standard/Guideline on Pilot Projects and Lessons Learned	Proposed Revisions Based on Lessons Learned from Pilot Projects June 9, 2004	Subcommittee Input and Final Decision October 19, 2004
PS–1: Storm Drainage Connections to the Sanitary Sewer Conclusion for Working Draft ACCEPTABLE as standard.	• Storm drainage connections to the sanitary sewer are only acceptable under special circumstances, such as runoff collected from areas subject to high pollutant loading.	No revisions proposed.	No changes made to October 21, 2002 Working Draft Standard.
PS-2: Design Capacity for Pipeline Rehabilitation Projects Conclusion for Working Draft ACCEPTABLE as standard.	• Pilot project designs did not include rehabilitation methods that would result in significant loss in hydraulic capacity, such as for a slip-lining project.	No revisions proposed.	No changes made to October 21, 2002 Working Draft Standard.
PS-3: Visual Inspection of Manholes for SSES Investigations Conclusion for Working Draft ACCEPTABLE as guideline.	• Significant sources of I/I can be missed if manhole inspections are performed during dry periods when groundwater levels are low.	• Recommend inspection during the wet season. "Wet season" to be defined as December 1st through February 28th. • Added inspection components to the investigation.	• Keep as guideline – Local Agencies do not want mandate; want to retain original MWPAAC Committee's decisions. • Include "Surface visual inspection of

Standard/Guideline Title & Description of Subcommittee Decision for October 21, 2002 Working Draft	Implementation of Standard/Guideline on Pilot Projects and Lessons Learned	Proposed Revisions Based on Lessons Learned from Pilot Projects June 9, 2004	Subcommittee Input and Final Decision October 19, 2004
		• Revise from a guideline to a standard.	manhole is acceptable unless I/I is apparent" or similar language.
PS-4: Closed Circuit Television (CCTV) Inspection of Sewers for SSES Investigations Conclusion for Working Draft ACCEPTABLE as guideline.	• Significant sources of I/I can be missed if CCTV inspection of pipelines is performed during dry periods.	• Recommend inspection during peak of the wet season. "Wet season" to be defined as December 1st through February 28th. • Revise from a guideline to a standard.	• Keep as guideline • Add recommendation of CCTV during saturated conditions. • Add classification for severity of I/I from a given leak.
PS-5: Smoke Testing for SSES Investigations Conclusion for Working Draft ACCEPTABLE as guideline.	• Guideline applied during SSES investigations for pilot projects. No significant problems encountered.	No revisions proposed.	No changes made to October 21, 2002 Working Draft Guideline.
PS-6: Dye Testing for SSES Investigations Conclusion for Working Draft ACCEPTABLE as guideline.	• Guideline applied during SSES investigations on several pilot projects. Appropriate agencies need to be notified of dye testing.	• Require notification of impending testing to the appropriate agencies.	Proposed change accepted.
PS-7: Modeling and Engineering Analysis Conclusion for Working Draft ACCEPTABLE as guideline.	• Modeling of local agency sewer system not performed as part of the pilot project design.	No revisions proposed.	No changes made to October 21, 2002 Working Draft Guideline.
PUB-1: Connections to Existing System Conclusion for Working Draft ACCEPTABLE as standard.	• Connection of new system to existing sewer system not included in pilot projects.	No revisions proposed.	No changes made to October 21, 2002 Working Draft Standard.
PUB-2: Sewers on Steep Slopes Conclusion for Working Draft ACCEPTABLE as standard.	• No sewers on steep slopes included in pilot projects.	No revisions proposed.	No changes made to October 21, 2002 Working Draft Standard.

Standard/Guideline Title & Description of Subcommittee Decision for October 21, 2002 Working Draft	Implementation of Standard/Guideline on Pilot Projects and Lessons Learned	Proposed Revisions Based on Lessons Learned from Pilot Projects June 9, 2004	Subcommittee Input and Final Decision October 19, 2004
PUB-3: Manhole Location and Covers Conclusion for Working Draft ACCEPTABLE as standard.	• Manhole modifications included in multiple pilot projects where the cover was subject to channelized stormwater flows and potential inundation.	No revisions proposed.	No changes made to October 21, 2002 Working Draft Standard.
PUB-4: Manhole Size Conclusion for Working Draft ACCEPTABLE as standard.	• New manholes installed as part of pilot projects followed standard spacing protocol between knockouts in accordance with WSDOT/APWA standards.	No revisions proposed.	No changes made to October 21, 2002 Working Draft Standard.
PUB-5: Manhole Joints Conclusion for Working Draft ACCEPTABLE as standard.	• Standard for manhole joints implemented where new manholes installed as part of pilot projects.	No revisions proposed.	No changes made to October 21, 2002 Working Draft Standard.
PUB-6: Side Sewer Connection Location & Taps Conclusion for Working Draft ACCEPTABLE as standard.	• Standard applied on pilot projects without any significant problems. Connections to high density polyethylene (HDPE) mains not addressed in the standard.	• Added requirement that taps to HDPE sewer mains to be made with a welded saddle connection.	• Other adequate means of making the connection to HDPE besides a welded connection are available. Delete the requirement. • Revise "…protrude" sentence (4th bullet) to address hammer taps specifically OR to adhere to Local Agency requirements.
PUB-7: Sewer System Design Conclusion for Working Draft ACCEPTABLE as standard.	• All pilot projects designed and stamped by licensed civil engineer.	No revisions proposed.	No changes made to October 21, 2002 Working Draft Standard.
PUB-8: Abandonment	• No abandonment of mains	No revisions proposed.	No changes made to October

Standard/Guideline Title & Description of Subcommittee Decision for October 21, 2002 Working Draft	Implementation of Standard/Guideline on Pilot Projects and Lessons Learned	Proposed Revisions Based on Lessons Learned from Pilot Projects June 9, 2004	Subcommittee Input and Final Decision October 19, 2004
ACCEPTABLE as standard.	• Manhole pans did not work with locking frame and cover.	frame and cover.	
PUB-14: Root Intrusion Conclusion for Working Draft ACCEPTABLE as standard.	• Root intrusion in sewer mains, laterals and side sewers turned out to be significant locations of infiltration into the system in the Kent, Mercer Island and Lake Forest Park pilot projects.	• Remove the clause that I/I be removed at locations of root intrusion "if it can be done so cost effectively". • Remove paragraph referencing spot repairs. Spot repairs are addressed elsewhere in the standards.	• 1st bullet, 2nd sentence: change "it shall be removed" to "it shall be evaluated for removal during the wet season." • Drop "that have been identified through SSES" from next sentence. • Drop last bullet.
PUB-15: Pipeline Leak Testing Conclusion for Working Draft ACCEPTABLE as standard.	• Leakage in rehabilitated pipelines was not evident unless the CCTV inspection was performed during the wet season.	• Require that CCTV inspections that are performed in lieu of air or water testing be performed during the wet season. • "Wet season" to be defined as December 1st through February 28th.	• Change "shall" to "recommendation" in last bullet. • Change definition of "wet season" dates.
PUB-16: Manhole Leak Inspection Conclusion for Working Draft ACCEPTABLE as standard.	• Leakage in rehabilitated manholes was not evident unless the visual inspection was performed during the wet season.	• Require that visual inspections be performed during the wet season. • "Wet season" to be defined as December 1st through February 28th.	• Remove reference to substantial completion from first sentence. • Change to recommendation of inspection during the wet season in last sentence.
PUB-17: CCTV Inspection Conclusion for Working Draft ACCEPTABLE as standard.	• Video inspections performed on all new and rehabilitated sewer mains and laterals on the pilot projects.	No revisions proposed.	No changes made to October 21, 2002 Working Draft Standard.
PUB-18: Inspection of Pipe	• Nearly full time inspection	• Require that a minimum of	• Last bullet: change

Standard/Guideline Title & Description of Subcommittee Decision for October 21, 2002 Working Draft	Implementation of Standard/Guideline on Pilot Projects and Lessons Learned	Proposed Revisions Based on Lessons Learned from Pilot Projects June 9, 2004	Subcommittee Input and Final Decision October 19, 2004
Installation and Backfill Conclusion for Working Draft ACCEPTABLE as standard.	performed on all the pilot projects. The inspection was critical to ensuring conformance with the specifications.	10% of the pipe length be inspected.	"shall" to "should".
PUB-19: Product Specific Inspection Conclusion for Working Draft ACCEPTABLE as standard.	• There were a number of instances on the pilot projects where field crews tried deviating from approved manufacturers' installation recommendations. Inspection was required to ensure conformance.	• Minor editorial revision proposed.	Revision accepted.
PUB-20: Certification, Warranty and Qualifications Conclusion for Working Draft ACCEPTABLE as guideline.	• Manufacturer certifications were required for rehabilitation products on the pilot projects. The requirement for certification ensured a vested interest by the product manufacturers. • Warranty requirements provided for the complete replacement of products or systems in the event of failure. • Specifications for each of the pilot projects included qualification requirements for potential bidders. These requirements helped ensure proven products were installed by contractors with the necessary qualifications.	• Minor editorial revisions. • Revise from a guideline to a standard.	• Keep as guideline. • Editorial revisions accepted.

Standard/Guideline Title & Description of Subcommittee Decision for October 21, 2002 Working Draft	Implementation of Standard/Guideline on Pilot Projects and Lessons Learned	Proposed Revisions Based on Lessons Learned from Pilot Projects June 9, 2004	Subcommittee Input and Final Decision October 19, 2004
PRV 1: Pipe Protection-Depth of Cover Conclusion for Working Draft ACCEPTABLE as guideline.	• Damage leading to I/I was found on shallow buried pipe. Side sewers appeared to be damaged from activities such as construction of fence posts and installation of shallow utilities like gas services.	• Revise from a guideline to a standard.	• Keep as guideline.
PRV 2: Allowable Connections to Side Sewer Conclusion for Working Draft ACCEPTABLE as standard.	• Numerous storm drain connections to side sewers were discovered during the course of pipe bursting work on private property.	No revisions proposed.	No changes made to October 21, 2002 Working Draft Standard.
PRV 3: Pipe Zone Bedding and Trench Backfill Conclusion for Working Draft ACCEPTABLE as guideline.	• Aged and unsuitable pipe materials and pipe installation techniques were likely causes of I/I in the laterals and side sewers rehabilitated in Kent, Kirkland, Ronald and Skyway.	• Revise from a guideline to a standard. • Allow deviation from the standard requirements if written recommendations are provided by the pipe manufacturer.	• Keep as guideline. • Revisions accepted.
PRV 4: Pipe Materials Conclusion for Working Draft ACCEPTABLE as guideline.	• Aged and unsuitable pipe materials and pipe installation techniques were likely causes of I/I in the laterals and side sewers rehabilitated in Kent, Kirkland, Ronald and Skyway.	• Revise from a guideline to a standard.	• Keep as guideline.
PRV 5: Inspection Wyes/Cleanouts Conclusion for Working Draft ACCEPTABLE as standard. Revisit this standard when the Standard Detail(s) SS-1 and SS-3	• Cleanouts were installed on private property for each of the private property pilot projects. • Cleanouts were often strategically located to avoid	• Require cleanout placement 2 feet to 5 feet from the face of the building on new installation only. • For rehabilitation projects, require inspection wye/cleanout placement within 2 feet of the	Revisions accepted.

Standard/Guideline Title & Description of Subcommittee Decision for October 21, 2002 Working Draft	Implementation of Standard/Guideline on Pilot Projects and Lessons Learned	Proposed Revisions Based on Lessons Learned from Pilot Projects June 9, 2004	Subcommittee Input and Final Decision October 19, 2004
are further reviewed.	damage to surface improvements such as driveways and landscaping. In some cases, the cleanouts were not installed within 5 feet of the face of the building.	termination of the rehabilitation.	
PRV-6: Lateral and Side Sewer Rehabilitation Methods Conclusion for Working Draft ACCEPTABLE as guideline.	• Standard referenced the "Green Book" Standard Specifications for Public Work Construction for pipe bursting, CIPP lining and fold and form. Specifications for these rehabilitation methods were developed and implemented during design of the pilot projects. Lessons learned during the construction were incorporated into a set of Guide Specifications for these rehabilitation methods. • Numerous storm drain connections to side sewers were discovered during the course of pipe bursting work on private property.	• Require pipe bursting, CIPP lining, and folded/formed liners to meet the requirements of King County Regional Inflow and Infiltration Control Program Guide Specifications. • Require disconnection of any storm drain to sewer connections discovered during the course of pipe bursting work. • Revise from a guideline to a standard.	• Keep as guideline. • Rewrite or move "storm drain" language (also in PUB-9).
PRV-7: Spot Repairs Conclusion for Working Draft ACCEPTABLE as standard.	• Spot repairs were not generally used for private property rehabilitation. Rehabilitation of the entire lateral/side sewer was typically more economical that a spot repair.	• Remove several of the requirements on repair clamps. Require connections be made with approved repair couplings. • Remove requirement that the entire side sewer pass a pressure test, when only a spot repair is	Revisions accepted.

Standard/Guideline Title & Description of Subcommittee Decision for October 21, 2002 Working Draft	Implementation of Standard/Guideline on Pilot Projects and Lessons Learned	Proposed Revisions Based on Lessons Learned from Pilot Projects June 9, 2004	Subcommittee Input and Final Decision October 19, 2004
		performed.	
PRV-8: Root Intrusion Conclusion for Working Draft ACCEPTABLE as standard.	• Root intrusion in laterals and side sewers turned out to be significant locations of I/I into the system in the Kent pilot project.	• Require that rehabilitation work performed on laterals and side sewers that utilizes public resources address removal of roots and repair of the pipe at the point of root intrusion.	• Change "…shall be addressed by removal of the roots…" to "…shall be addressed by evaluating removal of the roots…"
PRV-9: Side Sewer/Lateral Leak Testing Conclusion for Working Draft ACCEPTABLE as standard.	• Requirements for an air or water test were included in the specifications on the pilot projects. • The requirements were relaxed on several pipe bursting projects after several initial successful tests because of the logistical problems of testing a pipe that needs to be placed back in service.	• Minor editorial revisions. • King County Regional Inflow and Infiltration Control Program Guide Specifications allow some testing flexibility for pipe bursting and CIPP lining rehabilitation based on the quality of the contractor's work. • The inspection for leakage shall be performed during the wet season. "Wet season" to be defined as December 1st through February 28th.	• Clarify location for CCTV testing, e.g. "CCTV from point of connection."
PRV-10: Sanitary Side Sewer Inspection Conclusion for Working Draft ACCEPTABLE as guideline.	• Open cut replacement/installation of pipe and cleanouts was inspected prior to being backfilled.	• Revise from a guideline to a standard.	• Keep as guideline.
PRV-11: Sanitary Side Sewer CCTV Requirements Conclusion for Working Draft ACCEPTABLE as standard.	• Video inspection of the connection of new and rehabilitated laterals/side sewers to the sewer main was performed on the pilot projects.	• Minor editorial revisions.	Revisions accepted.

Standard/Guideline Title & Description of Subcommittee Decision for October 21, 2002 Working Draft	Implementation of Standard/Guideline on Pilot Projects and Lessons Learned	Proposed Revisions Based on Lessons Learned from Pilot Projects June 9, 2004	Subcommittee Input and Final Decision October 19, 2004
PRV-12: Product Specific Inspection Conclusion for Working Draft ACCEPTABLE as standard.	• There were a number of instances on the pilot projects where field crews tried deviating from approved manufacturers' installation recommendations. Inspection was required to ensure conformance.	• Minor editorial revisions.	Revisions accepted.
PRV-13: Product Specific Certification Conclusion for Working Draft ACCEPTABLE as standard.	• Manufacturer certifications were required for rehabilitation products on the pilot projects. The requirement for certification ensured a vested interest by the product manufacturers.	No revisions proposed.	No changes made to October 21, 2002 Working Draft Standard.
PRV-14: Bonding and Warranty Inspection Conclusion for Working Draft ACCEPTABLE as standard.	• Warranty requirements provided for the complete replacement of products or systems in the event of failure. • Warranty inspection of the pilot projects to be performed by the County during the 2004/05 wet season.	• Minor editorial revisions.	Revisions accepted.

Standard Detail Number & Title	Implementation of Standard Detail on Pilot Projects and Lessons Learned	Proposed Revisions	Subcommittee Input and Final Decision
SS-1: Side Sewer Installation	• Cleanouts installed on private property in conformance with Detail A/SS-4	• Remove requirement for a cleanout at the property line. • Removed reference to deleted standard at side sewer connection location.	Revisions accepted.
SS-2: Lateral Inspection Wye/Cleanout	• Cleanouts were originally required at property line on pipe bursting projects. Requirement was deleted because of the large increased cost and disruption to install the cleanout.	• Delete the detail.	Deletion accepted.
SS-3: Lateral Inspection Wye/Cleanout	• Cleanouts were originally required at property line on pipe bursting projects. Requirement was deleted because of the large increased cost and disruption to install the cleanout.	• Delete the detail.	Deletion accepted.
SS-4: Side Sewer Inspection Wye/Cleanout	• Cleanouts were often strategically located to avoid damage to surface improvements such as driveways and landscaping. In some cases, the cleanouts were not installed within 5 feet from the face of the building. • Cleanouts were buried below grade if requested by the property owner.	• Require cleanout installation within 5 feet of the building for new construction only. • For rehabilitation projects, require inspection wye/cleanout within 2 feet of the termination rehabilitation. • Allow cleanouts to be buried up to 6-inches below grade.	• Double sweep T can be wye with 45 degree angle. • Detail renumbered. Now SS-2.

Standard Detail Number & Title	Implementation of Standard Detail on Pilot Projects and Lessons Learned	Proposed Revisions	Subcommittee Input and Final Decision
SS-5: Lateral/Side Sewer Connection	• Detail used on open cut installation of laterals on Kirkland pilot project.	• Delete note requiring installation of cleanout at property line.	• Delete entire detail. After deleting cleanout at property line, the detail no longer addresses any I/I control issues.
SS-6: Vertical Lateral/Side Sewer Connection	• No vertical connections incorporated on pilot projects.	No revisions proposed.	• Detail renumbered. Now SS-3.
MH-1: Manholes—New Construction	• Detail used on several pilot projects where new manholes were installed.	No revisions proposed.	• Add note on how to deal with lifting holes (suggest sand / mortar, rather than epoxy)
MH-2: Manholes—Grade Rings and Steps	• Detail used on several pilot projects where new manholes were installed, and where frame and cover was raised to grade.	• Delete the requirement for a preformed concrete joint sealant gasket. These are not available.	Revisions accepted.
MH-3: Manholes Cover Insert	• Detail used on several pilot projects where manholes inserts were installed. • Inserts did not fit where existing manhole had a locking frame and cover.	• Add a note indicating that inserts are not appropriate for use on manholes with locking frame and cover.	Revisions accepted.
S-1: Sewer—Pipe Zone Bedding	• Detail incorporated on open cut installation of sewers and laterals.	No revisions proposed.	No changes made to October 21, 2002 Working Draft Detail.

Original Working Draft Policies (October 21, 2002)	◊ Pilot Project Lessons Learned Related to Policies that Support the Standards and Procedures ◊ Editing and Policy Combinations	Revised Draft Policies Proposed to the E & P Subcommittee	E & P Subcommittee Input and Decision
	• The pilot project experience included restoration to pre-construction condition, restoration to as near as possible to pre-construction condition.		
Policy #17 Local Agencies should be responsible for obtaining legal mechanisms to ensure that privately funded installation or rehabilitation of side sewers will result in facilities that continue to function correctly for a reasonable period of time.	• An important component of reducing liability is for a Lead Agency to require appropriate contractor bonding, licensing, insurance, and warranties.	Combine into Proposed Policy #7 (see above)	
Policy #18 Pre-qualification. The public agency should establish a procedure whereby contractors are "pre-qualified" before bidding for work utilizing specialized technologies for sewer systems.	• Pre-qualifying contractors has various liability and resource concerns. • Pilot project experience did show problems, however, if the contractor did not have certain minimum experience.	Combine into Proposed Policy #11 (see below)	
Policy #19 Local Agency Minimum Qualifications. Local Agencies should establish specific requirements for contractors that address experience, staff qualifications, references and	• Duplicative with Policy # 18	Combine into Proposed Policy #11 (see below)	

Original Working Draft Policies (October 21, 2002)	◊ Pilot Project Lessons Learned Related to Policies that Support the Standards and Procedures ◊ Editing and Policy Combinations	Revised Draft Policies Proposed to the E & P Subcommittee	E & P Subcommittee Input and Decision
bonding with an emphasis more on safety and restoration than on sewer system construction. An approved contractor with applicable insurance, bonds and licenses to work in the Associated Agency's right-of-way may be required.			
Combine old Policies 18 and 19	• Minimum contractor experience was important on successful pilot projects.	Recommend combining Policies 18 and 19 into one policy <u>Proposed Policy #11</u> The Lead Agency shall develop in the bid specifications specific minimum experience requirements for contractors to ensure that the contractor hired will have experience in the type of work they are to perform.	Accepted.
<u>Policy #20</u> The Agency managing an I/I control project must obtain all applicable permits from the municipal jurisdiction. The project's costs would cover all costs per the jurisdiction's codes and permit conditions and, therefore, would be borne by the Agency funding the I/I control project.	• Pilot project experience showed that specific permits such as SEPA, HPA, 404, or other total project environmental permits should be obtained by the Lead Agency while permits such as building, utility, ROW are usually best to be obtained by the contractor.	<u>Proposed Policy #12</u> The Lead Agency should obtain most applicable permits, including the SEPA, HPA, 404, or other State or Federally required permits. The contractor should obtain permits as detailed in the specifications such as the building, road or utility, ROW use, &/or clearing and grading permits. The permits required to be obtained by the contractor should be	• Change beginning to: "Local Agency should obtain all permits feasible, including…" • Drop last two sentences.

Original Working Draft Policies (October 21, 2002)	◊ Pilot Project Lessons Learned Related to Policies that Support the Standards and Procedures ◊ Editing and Policy Combinations	Revised Draft Policies Proposed to the E & P Subcommittee	E & P Subcommittee Input and Decision
		specifically listed in the bidding documents. The permit costs should be eligible for Regional I/I Control Program funding. Exceptions to this approach shall be specified in a particular IGA.	
	• The pilot projects showed that cooperative efforts between the Local Agency, the Associated Agency, and the County work best in obtaining permits.	Proposed Policy #13 For all permit needs, the jurisdictions including King County, the Local Agency, and the Associated Agency (if pertinent) will work cooperatively and collaboratively.	Accepted.
Policy #21 Local Agencies should be responsible for obtaining the legal mechanisms to ensure that publicly funded installation or rehabilitation of public sewers will result in facilities that continue to function correctly for a reasonable period of time.	• There is no need in the Policies to separate policies into private or public categories, therefore this can be combined into one policy with private property.	Combine into Proposed Policy #7 (see above)	
Policy #22 MWPAAC Sub-committee Review. An "I/I Control Program" Subcommittee(s) would be formed. Representation, process and documentation protocols would be established. The Subcommittee(s) would	• Development of the Regional I/I Control Program has included active involvement of a MWPAAC Subcommittee in providing direction and input for the Program. • Such involvement should continue during Program	Combine into Proposed Policy #14 (see below)	

Original Working Draft Policies (October 21, 2002)	◊ Pilot Project Lessons Learned Related to Policies that Support the Standards and Procedures ◊ Editing and Policy Combinations	Revised Draft Policies Proposed to the E & P Subcommittee	E & P Subcommittee Input and Decision
consider proposal(s) and report to the full MWPAAC describing the revision to Standards, Guidelines &/or Policies as: (a) significant; (b) no effect on the consistency or effectiveness of the Program; &/or (c) an enhancement to the Program. The Subcommittee(s) would recommend whether or not a revision should be adopted as part of the Regional I/I Control Program.	implementation. • The term "Guidelines" has been replaced by "Procedures."		
<u>Policy #23</u> MWPAAC members would consider the recommendations of the "I/I Control Program" Subcommittee then, per the method established in the By-Laws, the Committee would recommend to King County the adoption of specific changes to the Regional I/I Control Program's Standards, Guidelines and Policies.	• MWPAAC was informed of Regional I/I Control Program components and active in decision-making. • This approach should continue with Program implementation. • The term "Guidelines" has been replaced by "Procedures."	Combine into Proposed Policy #14 (see below)	
		<u>Proposed Policy #14</u> MWPAAC shall review and make recommendations on proposed revisions to the Regional I/I	Accepted.

Original Working Draft Policies (October 21, 2002)	◊ Pilot Project Lessons Learned Related to Policies that Support the Standards and Procedures ◊ Editing and Policy Combinations	Revised Draft Policies Proposed to the E & P Subcommittee	E & P Subcommittee Input and Decision
		Control Program Standards, Procedures, & Policies. MWPAAC shall recommend whether or not a revision should be adopted as part of the Regional I/I Control Program.	

APPENDIX C

This appendix is available electronically upon request.

APPENDIX D

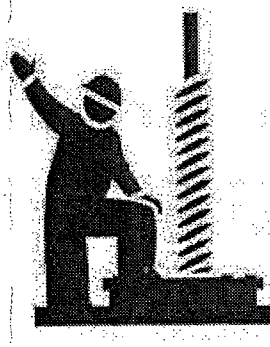

COPY

King County
Department of
Natural Resources and Parks
Wastewater Treatment Division
Regional I/I Control Program

Construction Update

Mercer Island Sewer Repair Pilot Project

Construction activities begin the week of August 11, 2003

This month Gelco Services, Inc., begins cleaning and lining the sewer mains in a portion of the East Seattle neighborhood as part of a joint City of Mercer Island and King County Wastewater Treatment Division's Regional Infiltration/Inflow Control Program. During the summer of 2002 crews conducted a sewer system evaluation study that included smoke testing and closed circuit television (CCTV) inspections to determine the health of the sewer system in the neighborhood. This work showed defects such as cracks, offset joints and tree root intrusion.

Infiltration/Inflow (I/I) is clean storm and/or groundwater that enters the sewer system through cracked pipes, leaky manholes, or improperly connected storm drains, down spouts and sump pumps. Most inflow comes from stormwater and most infiltration comes from groundwater.

More than 16,000 linear feet of mains will be rehabilitated using a technology known as **cured-in-place lining**. The pipe is repaired by first pulling a fiberglass and resin liner into the pipe. The liner is then inflated with steam, which expands the liner and forces it to conform to the pipe being repaired. The liner then cures in several hours, leaving a smooth, jointless, one-piece, leak-free pipe. There is no excavation required for installation of the sewer main liners. The normal sequence of work is as follows:

- Step 1: Pipeline is cleaned and videotaped;
- Step 2: Liner is installed in the sewer main;
- Step 3: Holes are cut in the liner to reopen the service connections.

Step 1 of this process is usually completed a few days before any lining work is done. Then, steps 2 and 3 are performed, usually in one twelve hour period.

(Continued on back)

Please Note:
During the lining process, homes can be disconnected from the sewer for up to 8 hours. Crews will notify residents 48-hours before construction by placing a notice, usually a door-hanger at the front door. Residents are asked to reschedule uses of water such as showers, washing machines and dishwashers for the day and to not flush toilets during the sewer service disruption. Water flowing into the pipe adversely affects the curing process.

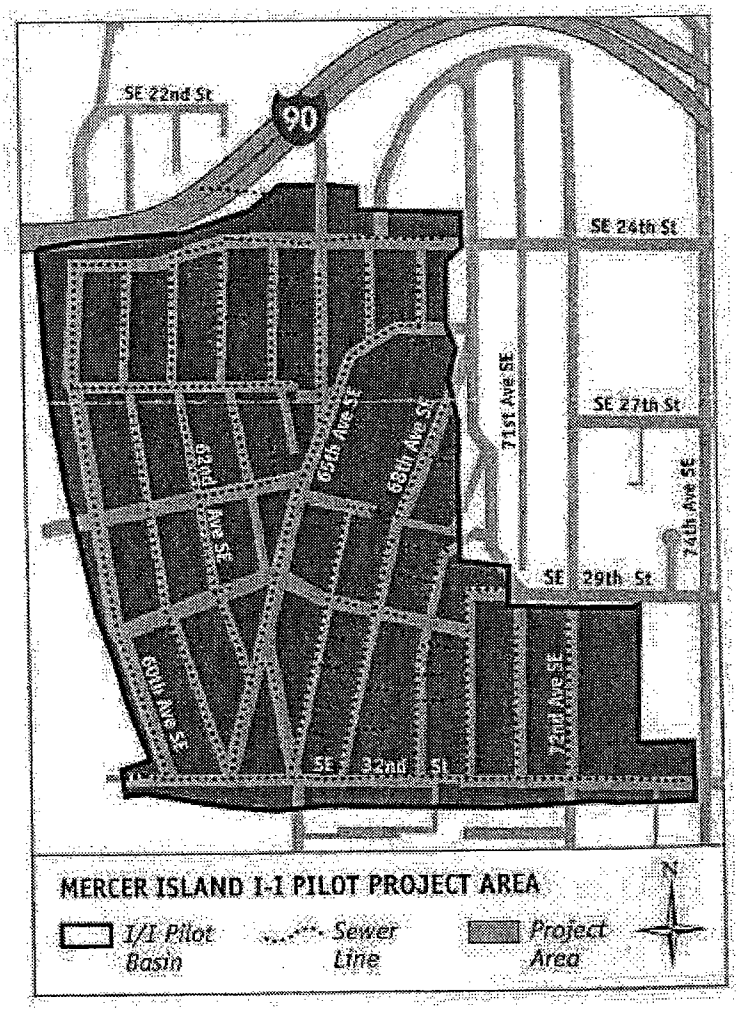

Although this trenchless method means we are not tearing up the street to fix the mains there are still several impacts to the neighborhood. Traffic flaggers and signs will help direct drivers safely around the trucks and equipment. Residents will experience sewer service interruptions while crews install the pipe lining.

Pilot Project Schedule

July 2003: Construction contract awarded to Gelco Services, Inc.

August–October 2003: Sewer main cleaning, lining

November 1, 2003: Construction work and restoration substantially completed

For More Information:

I/I Program Web Site: http://dnr.metrokc.gov/wtd/i-i

Mercer Island Pilot Project Web Site: http://dnr.metrokc.gov/wtd/i-i/Pilots/MIPilot/index.htm

If you have any questions or concerns about this pilot project, please contact:

After Hours/King County Pager: 206-540-7437

Mary Lundt, Project Manager
King County Wastewater Treatment Division
206-263-3184
E-mail: mary.lundt@metrokc.gov

Patrick Yamashita, City Engineer
City of Mercer Island
206-236-3620
E-mail: patrick.yamashita@ci.mercer-island.wa.us

King County
Department of Natural Resources and Parks
Wastewater Treatment Division
201 South Jackson Street, Suite 512
Seattle, WA 98104-3855

Alternative formats available
206-263-6029 (voice) or 711 (TTY)

King County
Department of Natural Resources and Parks
Wastewater Treatment Division

Regional Infiltration and Inflow Control Program

COPY

City of Kent/King County Infiltration/Inflow Removal Pilot Project

KENT WASHINGTON

Background

King County is responsible for transporting and treating wastewater collected by 32 local agencies in the Seattle metropolitan area. These agencies are working together to define ways to remove clean water, called infiltration (groundwater) and inflow (stormwater) or I/I, from the wastewater system.

A major part of the Regional I/I Control Program is planning, designing, constructing, and then monitoring the effectiveness of a limited number of pilot projects to remove I/I. It is anticipated that these pilot projects will test different techniques for I/I removal that are applicable for the entire region. Through a regional consensus process, local agencies selected ten final pilot projects from a broad list of candidates. A project proposed by the City of Kent was selected as one of the ten projects. Flow measurements for the project area indicated a significant amount of I/I. This pilot project will be funded through the King County I/I Control Program.

Kent Pilot Project Description

The Kent pilot project will rehabilitate side sewers on private property from the connection at the house down to the main sewer pipe in the street. Sewer system investigations conducted last fall, which included a combination of smoke testing and closed circuit television (CCTV) inspections showed defects in the side sewers such as cracks, offset joints and tree root intrusion. The purpose of the Kent pilot project is to determine the cost effectiveness and technical effectiveness of removing I/I by repairing private side sewers in the basin.

The repair method to be used in the Kent pilot project is a technology known as cured-in-place lining. We plan to use a specific type of lining known as "T-Liner".

The majority of the 168 side sewers in the pilot project area will receive this lining, in effect giving the homeowner a new side sewer. Small excavations will be required for the installation of cleanouts to facilitate installation of the liner. The contractor will restore areas disturbed by excavation after installing the cleanouts and completing the lining process.

This trenchless technology is much less invasive to the property than typical full trench excavation methods and provides a quality repair solution. The liner material is a felt tube specifically manufactured for the length

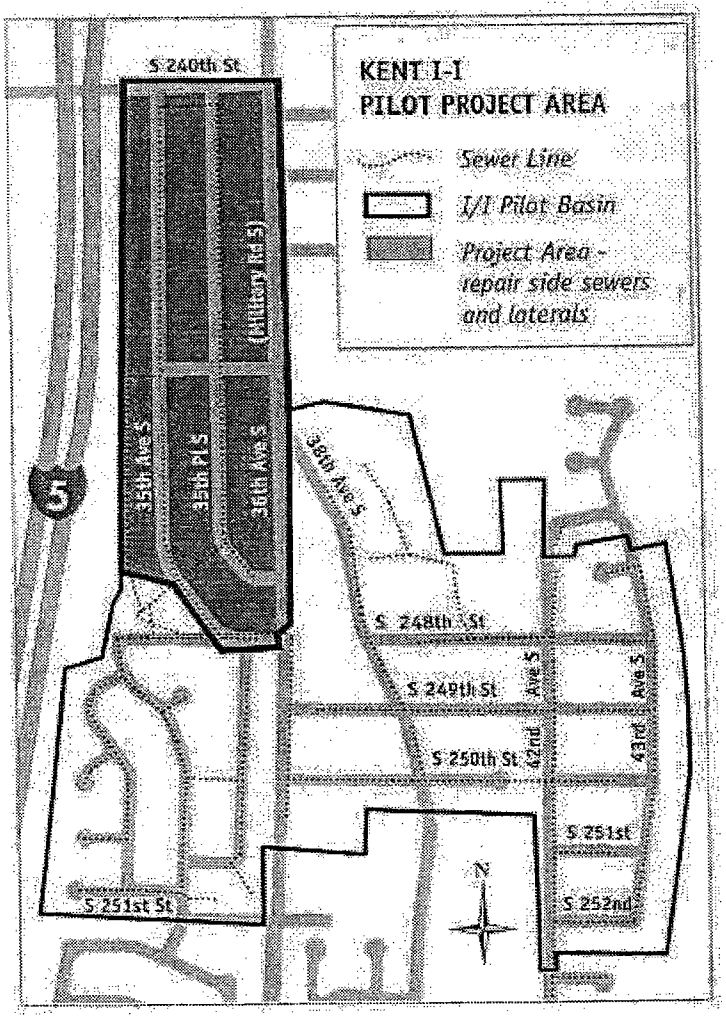

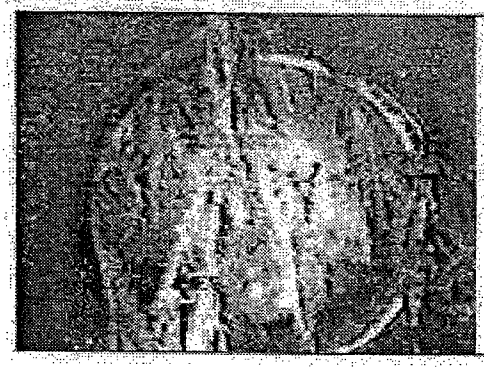

Before:
The picture shows tree root intrusion causing a blockage and allowing groundwater to enter.

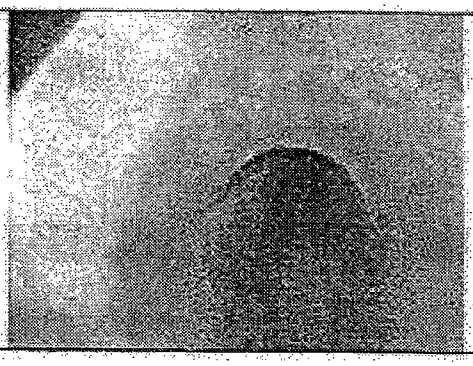

After:
The liner cures in approximately 2 hours, leaving a smooth, jointless, one-piece, leak-free seal.

and diameter of the pipes being repaired. The tube is vacuum impregnated with a polyester or vinyl ester resin and placed inside a protective installation device that is inserted into the existing sewer through the cleanout installed near the home where the side sewer connects with the building. The lining is installed by an inversion technique using air or water pressure. The lining and resin cure in about 2 hours, leaving a smooth, jointless, one-piece, leak-free seal.

During construction homes would be disconnected from the sewer for up to 8 hours. We would notify residents when the work will occur so they can make arrangements and reschedule uses of water such as showers, washing machines and dishwashers.

The County will monitor flows in the basin after construction (winter 2003/2004) to determine the amount of I/I removed as a result of the side sewer rehabilitation work. The shaded area in the map on the previous page depicts the approximate area in which work will be conducted (area along 35th Ave. S., 35th Pl. S., 36th Pl. S. and Military Rd S.). However, depending on availability of funds and whether the side sewers meet project criteria, not all homes in the shaded area will be included in the project.

Pilot Project Schedule

Designs and specifications for this project are to be completed in mid March 2003. The project will be bid in late-April/early-May 2003. King County will award the contract and work will begin in early June 2003. All construction and restoration work will be complete by fall 2003.

For More Information

King County and the City of Kent will provide more detailed information before construction begins, and will work closely with property owners and residents of the pilot project area to minimize the impacts of construction.

You can get more information about the King County Regional I/I Control Program by visiting the King County website (http://dnr.metrokc.gov/wtd/i-i). If you have any questions or concerns, please contact:

Erica Herrin, Project Manager
King County Wastewater Treatment Division
206-684-1138 E-mail: erica.herrin@metrokc.gov

Dave Brock or **John Hawkins**
City of Kent, Public Works Operations
253-856-5600 E-mail: dbrock@ci.kent.wa.us

Available in alternative formats
206-684-1138 or TTY Relay:711

King County
Department of Natural Resources and Parks
Wastewater Treatment Division
King Street Center
201 South Jackson Street, Suite 512
Seattle, WA 98104-3855

Produced by:
WLRD Visual Communications & Web Unit (PM)

File:
0301 WTD xxxtitlepages

Attachment A

Standards, Procedures and Policies for I/I Reduction Projects

Final Issues and Findings

conveyance systems) will be funded from regional wastewater revenues. The funding will come from money that is saved by minimizing capital improvements.

- Enforcement procedures for the standards, guidelines and procedures have not been developed or discussed at this point in time. After the initial projects, if the standards, guidelines and procedures are adopted, a collaborative process to establish enforcement procedures will be initiated.

- There should be an additional policy that spells out when a Local Agency will be responsible for funding general side sewer repair. Unless there is absolute proof, smoke-testing or some other court-verified proof, that a property owner is causing a problem, the owner may not cooperate.

Specific Issues and Findings – Draft Standards/Guidelines/Procedures

- Per PUB-2, the County is to verify that a Professional Engineer does the design of County owned pipes to be installed on steep slopes.

- PUB-17 provides that all newly installed laterals shall be CCTV inspected. This applies only to the situation and condition where the lateral cannot be pressure tested.

Specifc Issues and Findings – Draft Standard Details

- Standard details were developed to augment the Local Agency standard details and were not meant to stand alone.

- The guide specifications have been sent to the Local Agencies, including lessons learned.

- The intent is to have a group look at industry standards and act as a clearinghouse for lessons learned. He stressed it was a part of the process that he didn't want to get lost during the discussions.

Specific Issues and Findings - Draft Policies

- The purpose of the draft policies is to support the draft standards, guidelines, and procedures; and to provide a framework upon which the County and the Local Agencies could craft specific policies. Prior to the pilot projects there had been 23 draft policies, which had since been condensed into 15 by the E&P Subcommittee. The draft policies have not been subject to legal review and do not represent final policy language.

- **Policy #1: Public Funding for I/I Reduction Projects -** The language of the Right of Entry agreement language was carefully crafted to address the issue of future liability after the completion of I/I rehabilitation on private property. There was a clause terminating liability on a specific date or at the end of the warranty period. When a defect is found that points to a lack of performance by a contractor, it would be addressed on a case-by-case basis by the risk-assessment staff of the agency involved.

- **Policy #2: Public Awareness of I/I: Educational Materials** - The policy will include how the information clearinghouse will be effective and how information will be disseminated, for example via the website, mailing lists, hotlines, etc. A multi-lingual approach similar to the alternative formats for the pilot projects is also needed,

- **Policy #3: Public Awareness of I/I: Responsibility for Community** - Unless otherwise specified or negotiated in the IGA, the Lead Agency for each specific I/I reduction project shall be responsible for community education/involvement.

- **Policy #4: Access to Private Property for I/I Reduction and Control** - The local agency shall pass the necessary ordinances/resolutions and develop the appropriate access agreements that allow each agency or its agents to gain access to private property, such as a right-of-entry or a construction and inspection easement.

- **Policy #5: Inspection Training** - To promote region-wide consistency, the County, in conjunction with the local agencies, shall provide training opportunities on an I/I control program to agency representatives.

- **Policy #6: Limiting Liability** - If public resources support any portion of the I/I reduction work on privately owned property, then the Lead Agency shall establish a process to manage and limit its liability. The potential site and in-ground liability issues shall be a part of the I/I planning and design process. This issue is typically between the contractor and the Lead Agency. Contractors hold the client blameless for work being done.

- **Policy #7: Bonding, Licensing, Insurance, and Warranty Provisions** - The Lead Agency shall be responsible for ensuring that, for publicly funded I/I reduction projects, the construction contract includes appropriate bonding, licensing, insurance, and warranty provisions to ensure satisfactory completion of the project and warranty of the project for a sufficient amount of time (recommended minimum 12 months).

- **Policy #8: Stormwater Drainage Ordinances** - Where I/I work on private or public property results in the diversion of stormwater drainage, and there exists a stormwater system, then the I/I work shall involve meeting the provisions of the controlling jurisdiction's current stormwater drainage ordinances. Jurisdictional approval must be obtained. The long-term the potential for cumulative impacts resulting from I/I rehabilitation and stormwater diversions needs to be anticipate as part of the I/I rehabilitation planning process. Local and regional agencies responsible for stormwater management need to be included in the early planning stages. For the nine cost-effective initial projects that have been identified, the County and local agencies should initiate this coordination process now.

- **Policy #9: Responsibility for Stormwater Drainage** - Where I/I work results in the diversion of stormwater and an adequate stormwater system does not exist, the private property owner (on private property) or the local agency or associated agency (on public property) bears responsibility for discharging the stormwater drainage to an appropriate location.

- **Policy #10: Infeasible and/or Prohibitively Expensive Modifications -** Where an I/I control project would result in the diversion of stormwater drainage, and the modifications required to properly discharge the stormwater are deemed to be infeasible and/or prohibitively expensive (for the property owner), consider giving the property owner choice of disconnection of illicit connection or surcharge. The term "prohibitively expensive" needed to be defined to establish a consistent method of evaluation. The surcharge could act as leverage in prompting the property owner, local agency or County to make necessary I/I repairs.

- Additional Options for modifying the policies related to I/I related diversions of stormwater

  - Modify draft Policy #1 to read, "environmentally infeasible and/or prohibitively expensive modifications should be considered for variances/waivers, <u>but if a property owner fails to make repairs that are feasible and not prohibitively expensive, a surcharge may be levied</u>." This would allow for the removal of draft Policy #10.
  - Modify draft Policy #1 to read, "environmentally infeasible and/or prohibitively expensive modifications should be considered for variances/waivers <u>that may include a surcharge</u>." This would allow for the removal of draft Policy #10.
  - Do not modify Policy #1 and re-word Policy #10 to include a variance/waiver.
  - Modify draft Policy #10 to read, "Local Agency <u>may</u> add a surcharge".
  - Modify draft Policy #10 to allow for a temporary service agreement that says if and when conditions change, the property owner would be required to disconnect.
  - Modify draft Policy #10 to allow the property owner the option of obtaining a waiver until the property is sold or placing a lien on the property. The surcharge in draft Policy #10 is not associated with a surcharge for the County system. It is intended as a way for Local Agencies to deal with their customers.

- **Policy #11: Property Restoration -** The Lead Agency shall establish a standard for property restoration before initiating any I/I work (including landscaping, sidewalks, and driveways). Public property restoration is governed by local agency or associated agency codes or ordinances.

- **Policy #12: Contractor Qualifications -** The Lead Agency shall develop in the bid specifications specific minimum experience requirements for contractors to ensure that the selected contractor has experience in the type of work to be performed

- **Policy #13: Required Permits -** The lead agency should obtain all feasible state or federally required permits. The contractor should obtain permits as detailed in the specifications, such as the building, road, utility, right-of-way use, and/or clearing and grading permits. The permits that the contractor is required to obtain should be listed in the bidding documents.

- **Policy #14: Cooperative Efforts -** For all permit needs, the jurisdictions including the County, the local agency, and the associated agency (if pertinent) will work cooperatively and collaboratively.

- **Policy #15: Revisions to Standards, Procedures, and Policies -** MWPAAC shall review and make recommendations on proposed revisions to regional I/I control program.

MWPAAC shall recommend whether or not a revision should be adopted as part of a regional I/I Control Program.